TEAC

SERVICE MANUAL

RW-800

COMPACT disc DIGITAL AUDIO Recordable ReWritable

CD Rewritable Deck

CONTENTS

1 SPECIFICATIONS 2
2 ADJUSTMENTS AND CHECKS 3
3 EXPLODED VIEWS AND PARTS LIST 6
4 PC BOARDS AND PARTS LIST 8
5 INCLUDED ACCESSORIES 15

目 次

1 仕 様 2
2 調整と確認 3
3 分解図とパーツリスト 6
4 基板図とパーツリスト 8
5 付属品 15

NOTES

- PC boards shown are viewed from parts side.
- Parts marked with * require longer delivery time.
- The parts with no reference number or no parts number in the exploded views are not supplied.
- As regards the resistors and capacitors, refer to the circuit diagrams contained in this manual.
- ⚠ Parts marked with this sign are safety critical components. They must be replaced with identical components - refer to the appropriate parts list and ensure exact replacement.
- Parts of [ ] mark can be used only with the version designated.
  [J]:JAPAN [US]:U.S.A. [C]:CANADA [GE]:GENERAL EXPORT
  [E]:EUROPE [UK]:U.K. [A]:AUSTRALIA

注　意

- プリント基板図は部品面を示しています。
- *印の部品は納期が若干かかります。
  あらかじめご了承ください。
- 分解図に部番のない部品および品番のない部品は供給できません。
- 標準の抵抗、コンデンサーは省略してあります。
  回路図を参照してください。
- ⚠印は安全重要部品です。
  交換する時は必ず指定の部品を使用してください。
- 仕向先
  [J]:JAPAN [US]:U.S.A. [C]:CANADA [GE]:GENERAL EXPORT
  [E]:EUROPE [UK]:U.K. [A]:AUSTRALIA

Effective : June, 2000

S-0024A

1 SPECIFICATIONS
仕　様

Media type .....CD-RW and CD-R for Digital audio (record and playback), CD (playback only)
Frequency converter input sampling frequency .....32kHz~48kHz
Recording sampling frequency 44.1kHz
Frequency response.....20Hz~20kHz
(playback: ±0.5dB, recording: ±1dB)
Signal to noise ratio .....More than 97dB (playback)
More than 92dB (recording)
Dynamic range .....More than 94dB (playback)
More than 92dB (recording)
Total Harmonic Distortion .....Less than 0.004% (playback)
Less than 0.005% (recording)
Wow & flutter .....Unmeasurable

Audio Input Sensitivity/Impedance ..LINE : -10dBV (316mV)/33kΩ
MIC : -50dBV (3.16mV)/47kΩ
Output Level/Impedance.....LINE : -10dBV (316mV)/800Ω
PHONES : -35mW/32Ω
Maximum output level .....LINE :+6dBV (2.0V)

Power supply.....120/230 V AC, 50/60Hz (General export model)
230 V AC, 50Hz (Europe model)
Power consumption .....27 W
Dimensions (W x H x D) .....435 x 102 x 312 mm
(17-1/8" x 4" x 12-5/16")
Weight (Net).....5.5kg (12lb)

Standard Accessories.....Audio signal connection cord x 2
Remote control unit x 1
Batteries (AA,R6,SUM-3) x 2

● Improvements may result in specification or feature changes without notice.

記録メディア .....音楽用CD-R/CD-RW
入力サンプリング周波数.....32kHz～48kHz
録音サンプリング周波数 44.1kHz
周波数特性 .....20Hz～20kHz
(再生時：±0.5dB、記録時：±1dB)
S/N比 .....97dB以上(再生時)
92dB以上(記録時)
ダイナミックレンジ .....94dB以上(再生時)
92dB以上(記録時)
歪率.....0.004%以下(再生時)
0.005%以下(記録時)
ワウ・フラッター .....測定限界以下

入力端子.....アナログ：ライン×1系統
マイク×1系統(L/MONO, R)
デジタル：光/同軸　各1系統
出力端子.....アナログ：ライン×1系統、ヘッドホン×1
デジタル：光/同軸　各1系統
ライン入力 .....入力インピーダンス：33kΩ
規定入力レベル：－10dBV(316mV)
マイク入力 .....入力インピーダンス：47kΩ
規定入力レベル：－50dBV(3.16mV)
ライン出力.....出力インピーダンス：800Ω
規定出力レベル：－10dBV(316mV)
最大出力レベル：＋6dBV(2.0V)
ヘッドホン出力.....32Ω

電源 .....AC100V、50-60Hz
消費電力..... 27W
外形寸法(幅×高さ×奥行き).....435×102×312mm
質量..... 5.5kg
動作保証温度 .....5℃～35℃
付属品 .....リモコン(RC-754)
リモコン用乾電池(単3)×2本
オーディオケーブル×2本
取扱説明書、保証書

● 仕様および外観は、改善のため予告なく変更することがあります。

SAFETY INFORMATION

This product has been designed and manufactured according to FDA regulations "title 21, CFR, chapter 1, subchapter J, based on the Radiation Control for Health and Safety Act of 1968", and is classified as a class 1 laser product. There is no hazardous invisible laser radiation during operation because invisible laser radiation emitted inside of this product is completely confined in the protective housings.
The label required in this regulation is shown ①.

● CAUTION
USE OF CONTROLS OR ADJUSTMENT OR PERFORMANCE OF PROCEDURES OTHER THAN THOSE SPECIFIED HEREIN MAY RESULT IN HAZARDOUS RADIATION EXPOSURE.

Optical pickup:	Type	: KRS-202A or KRS-220B
	Manufacturer	: SONY Corporation
	Laser output	: Less than 0.1mW (Play) and 32mW (Record) on the objective lens
	Wavelength	: 777 - 787nm

① For U.S.A.

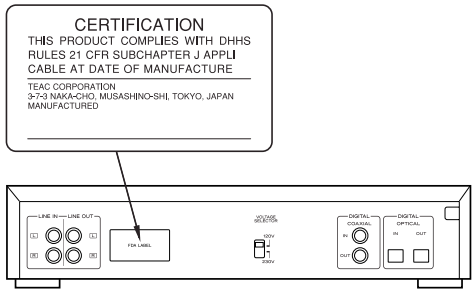

2 ADJUSTMENTS AND CHECKS

調整と確認

2-1 Test Mode

In Standby mode, press and hold the STOP + PLAY + PAUSE keys simultaneously for 5 seconds. The display will show the model name and the system controller's version number, and the test mode is initiated.
Press the STOP key to exit from the test mode and return to the standby mode.

2-1-1 Front key check

1. Press the PLAY key to enter the front key check mode.
2. The display shows the name of each key to be checked; press the corresponding key.
   When the check result of the key is OK, the display shows another key name. When the result is No Good, the display continues to show the same key name.
3. When all of the keys have been checked, the display shows "timer play". Follow this instruction by checking the TIMER slide switch operation.
4. The display finally shows "dial50". Check the MULTI JOG dial so that the displayed figure increases when the dial is rotated clockwise and decreases when it is rotated counterclockwise.
5. Press the PLAY key to exit from the front key check mode and return to the Version number display mode.

2-1-2 Display check

1. Press the DISPLAY key to enter the display check mode.
2. Press DISPLAY key a few times and ensure that each press lights the display blocks one after another.
3. When all the indicators are lit, press the DISPLAY key to exit from the display check mode and return to the Version number display mode.

2-1-3 EEPROM default setting

1. Press the ERASE key.
   This writes the default values in the EEPROM and checks the written data. When the default data is written correctly, the display shows "EEPROM OK !!". If not, it shows "EEPROM NG !!".
2. Press the ERASE key again to return to the Version number display mode.

2-1-4 Total recording time display

1. When the RECORD key is pressed, the display shows the time in which the pickup outputs the recording power (in the unit of hour).
2. Press the RECORD key again to return to the Version number display mode.

2-1 テストモード

スタンバイモードの状態で、STOPキー＋PLAYキー＋PAUSEキーを5秒間押し続けると、表示部に機種名とシスコンのVersion No.が表示されテストモードに入る。
STOPキーを押すと、テストモードは終了しスタンバイモードに戻る。

2-1-1 フロントキーチェック

1. PLAYキーを押し、フロントキーチェックモードに入る。
2. 表示部にチェックするキーの名称が表示されるので、そのキーを押す。
   チェックOKなら次のキーの名称が表示され、NGなら表示は変化しない。
3. 一通りキーの確認が終了すると、"timer play"の表示が出る。指示通りTIMERスライドスイッチを動かして確認する。
4. 最後に"dial50"の表示が出る。MULTI JOGダイアルを回し、表示の数字が右回しで増加、左回しで減少することを確認する。
5. PLAYキーを押すと、フロントキーチェックモードを終了しVersion No.表示に戻る。

2-1-2 ディスプレイチェック

1. DISPLAYキーを押し、ディスプレイチェックモードに入る。
2. DISPLAYキーを押すたびに、表示部がブロックごとに点灯して行くことを確認する。
3. 表示部が全点灯した状態からDISPLAYキーを押すと、ディスプレイチェックモードを終了しVersion No.表示に戻る。

2-1-3 EEPROM デフォルト設定

1. ERASEキーを押す。
   EEPROMにデフォルト値を書き込み、自動的に書き込みチェックを行う。このとき、正しく書き込めていれば、表示部に"EEPROM OK !!"と表示され、不良の場合は"EEPROM NG !!"と表示される。
2. 再度ERASEキーを押すと、Version No.表示に戻る。

2-1-4 記録積算時間表示

1. RECORD キーを押すと、ピックアップが記録パワーを出力した時間を表示する。(単位：hour)
2. 再度 RECORD キーを押すと、Version No. 表示に戻る。

2-2 Audio Check オーディオ系の確認

2-2-1 Playback performance 再生系

Measurement point: LINE OUT
Mode: play

ITEM 項　目	TEST DISC テストディスク	PLAYBACK SIGNAL 再生信号	SPECIFICATIONS 規　格	REMARKS 備　考
1. Playback level **再生レベル**	MCD-111 Track 2	1kHz, 0dB	2.0±0.5V	
2. Playback distortion **再生歪率**	MCD-111 Track 2	1kHz, 0dB	0.005% or less	400Hz HPF ＋ 22kHz LPF
3. Playback frequency response **再生周波数特性**	MCD-111 Track 3～6	20Hz～20kHz, 0dB	0±1dB	Reference level: 1kHz 1kHz基準
4. Playback S/N ratio **再生S/N比**	MCD-111 Track 7	－∞dB	94dB or better	22kHz LPF ＋ IEC-A
5. Playback channel separation **再生チャンネル** **セパレーション**	MCD-111 Track 8, 10	1kHz, 0dB	80dB or better	22kHz LPF ＋ IEC-A
6. Emphasis effect **エンファシス効果**	MCD-111 Track 13	16kHz, －20dB	－20±1dB	

2-2-2 Monitor performance モニター系

Measurement point: LINE OUT
Mode: record monitor

ITEM 項　目	INPUT SIGNAL (LINE IN) 入力信号	SPECIFICATIONS 規　格	REMARKS 備　考
1. Specified input level **規定入力レベル**	1kHz, ＋6dBV	＋6dBV±2dB	Rotate the REC LEVEL controls to positions at which the "OVER" segments of the level meter is just about to light. Do not alter the value after setting. REC LEVELつまみを回して、レベルメータの“OVER”が点灯する直前になるように設定する。調整後は動かさないこと。
2. Monitor distortion **モニター歪率**	1kHz, ＋6dBV	0.01% or less	400Hz HPF ＋ 22kHz LPF
3. Monitor frequency response **モニター周波数特性**	20Hz～20kHz, ＋6dBV	0±1dB	Reference level: 1kHz 1kHz基準
4. Monitor S/N ratio **モニターS/N比**		88dB or better	22kHz LPF ＋ IEC-A
5. Monitor channel separation **モニターチャンネルセパレーション**	L (R) ch: 1kHz, ＋6dBV R (L) ch: No signal	65dB or better	Ratio between the L CH and R CH outputs. Lchの出力とRchの出力の比。 22kHz LPF ＋ IEC-A
6. PHONES output level **PHONES出力レベル**	1kHz, ＋6dBV	PHONES: 1.1V or more	PHONES LEVEL: MAX Load: 32Ω
7. MIC input sensitivity **MIC入力感度**	MIC: 1kHz, －50dBV	＋6dBV±3dB	MIC LEVEL: MAX

3 EXPLODED VIEWS AND PARTS LIST

分解図とパーツリスト

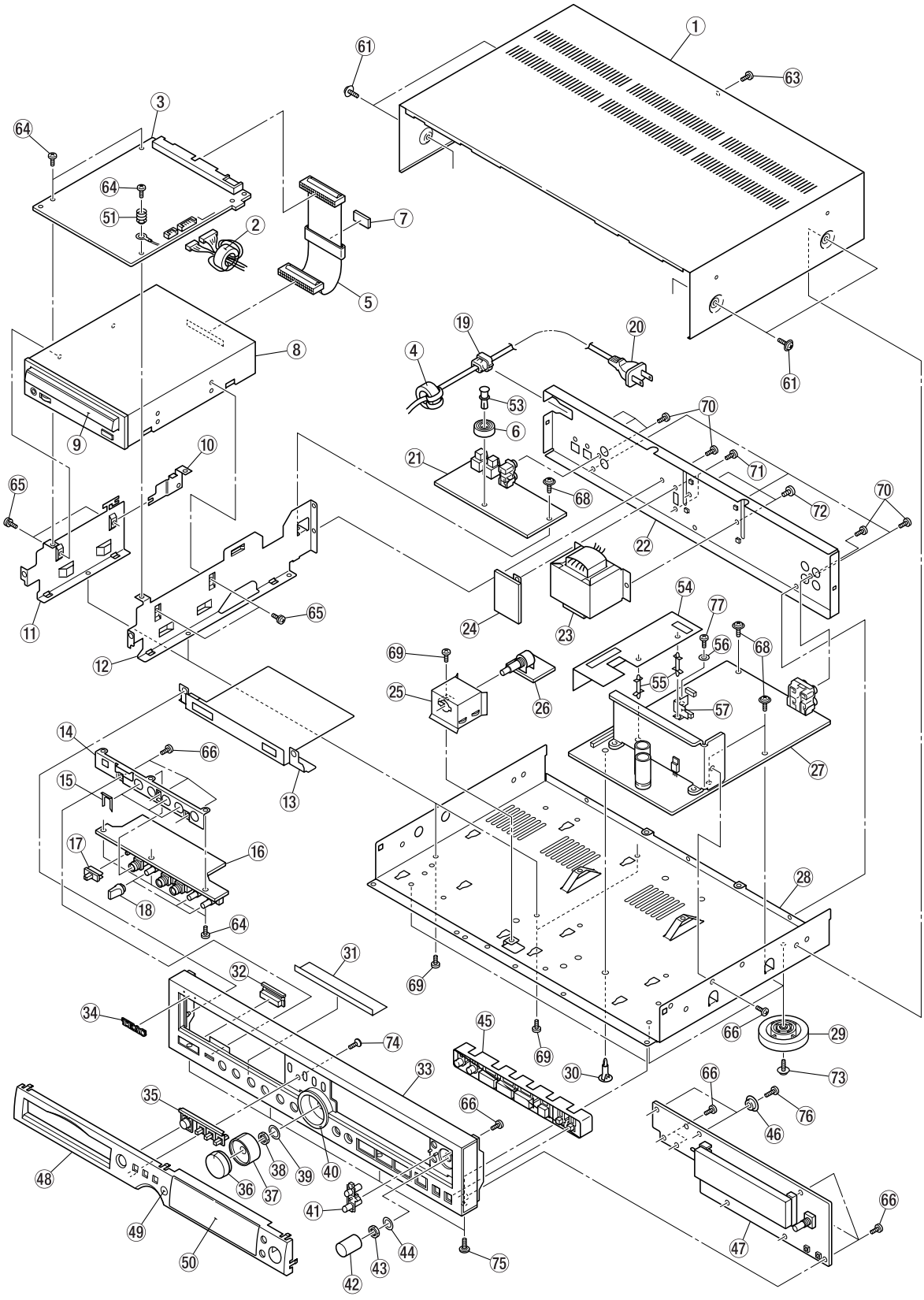

PARTS LIST

REF.NO.	PARTS NO.	DESCRIPTION
1	*3M0058120A	BONNET [EXCEPT J]
	*3M0058130A	BONNET [J]
2	*3E010000	FER.CORE B18T 25X12X15 [US,C,GE,E,UK]
3	3E9524710D	PCB ASSY,CONVERTER
4	*3E010000	FER.CORE B18T 25X12X15
5	*3E0117100A	WIREA,DRIVE-CONVERT 40P
6	3M001950	FOOT,21MM
7	3M0101100A	FOOT,2T
8	V00089400A	CD-W54E-A90
9	3M0089910B	PANEL TRAY [EXCEPT J]
	3M0089920A	PANEL TRAY [J]
10	*3M0101300A	BRACKET,EARTH CVT PCB
11	*3M0088400A	BRACKET MECHA SIDE(L)
12	*3M0088500B	BRACKET MECHA SIDE(R)
13	*3M0100400A	SHEET,SHILD PH PCB
14	*3M0088600C	BRACKET JACK
15	*3E011630	MOUNT PLATE JACK
16	*3E9521910A	PCB ASSY,MIC/HP
17	3M0057400A	KNOB,SLIDE(B) [EXCEPT J]
	3M0057410A	KNOB,SLIDE(N) [J]
18	3M0024800A	KNOB,PHONE VOLUME [EXCEPTJ]
	3M0024820A	KNOB,PHONE VOLUME(GOLD) [J]
19	⚠ *3M000880	BUSHING,#2271
20	⚠ *3E009000	POWER CORD [J]
	⚠ *3E009230	POWER CORD [US,C,GE]
	⚠ *3E000340	POWER CORD [E]
	⚠ *3E000350	POWER CORD [UK]
	⚠ *3E000360	POWER CORD [A]
21	*3E9522000B	PCB ASSY,DIGI I/O
22	*3M0058030C	PANEL,REAR [J,E,UK,A]
	*3M0058040C	PANEL,REAR [US,C,GE]
23	⚠ 3E0117700A	TRANS,CDRW
24	*3E9522100A	PCB ASSY,V SELECTOR[US,C,GE]
25	*3M0096600A	CASE SHIELD VR
26	*3E9522400A	PCB ASSY,VR
27	*3E9521800A	PCB ASSY,AUDIO/POWER [J,US,C,GE]
	*3E9521840A	PCB ASSY,AUDIO/POWER [E,UK,A]
28	*3M0057910B	CHASSIS,MAIN
29	3M0047200A	FOOT ASSY
30	*3M0062600A	SUPPORT,PCB SCD-12
31	*3M0100500B	SHEET,EARTH
32	3M0089500B	BUTTON POWER [EXCEPT J]
	3M0089510B	BUTTON POWER [J]
33	3M0088710C	PANEL,FRONT [EXCEPT J]
	3M0088720C	PANEL,FRONT [J]
34	*3M0051600A	TEAC EMBLEM(GOLD) [EXCEPTJ]
	*3M0051610A	TEAC EMBLEM [J]
35	3M0089300A	BUTTON UNT O/C [EXCEPT J]
	3M0089310A	BUTTON UNT O/C [J]
36	3M0090100A	KNOB REC(R) [EXCEPT J]
	3M0090110A	KNOB REC(R) [J]
37	3M0089700B	KNOB REC(L) [EXCEPT J]
	3M0089710B	KNOB REC(L) [J]
38	*3M001340	NUT,VR M9
39	*3M001350	PLAIN WSHR,VR M9.1
40	3M0089100A	RING REC KNOB [EXCEPT J]
	3M0089110A	RING REC KNOB [J]
41	3M0089200A	BUTTON MENU [EXCEPT J]
	3M0089210A	RING REC KNOB [J]
42	3M0089800A	KNOB D15 JOG [EXCEPT J]
	3M0089810A	KNOB D15 JOG [J]
43	*3M0096900A	NUT,M7
44	*3M0096800A	PLAIN WASHER,M7
45	3M0089400A	BUTTON UNT OPE [EXCEPT J]
	3M0089410A	BUTTON UNT OPE [J]
46	*3M0097400B	STOPPER BONNET
47	*3E9522300A	PCB ASSY,FRONT
48	3M0088800C	ESCUTCHEON F [EXCEPT J]
	3M0088810B	ESCUTCHEON F [J]
49	3M0089000B	COVER SENSOR
50	3M0088900B	WINDOW FL
51	*3M0101500A	SPRING,EARTH BONNET
53	*3M0112200A	SUPPORT PCB RCA-6
54	*3M0099200B	SHEET BARRIER E.PWR[E,UK,A]
55	*3M0099100A	SUPPORT,PCB CBS-15 [E,UK,A]
56	*3M0102400A	PLAIN WASHER,3.5X10X1 [EXCEPT J]
57	*3M0101600B	SHEET BARRIER CONECT [EXCEPT J]
61	*3B0001806A	SCREW,J,S M3X6(BLK)
63	*3B0003808A	SCREW,VPC M3X8(BLK)
64	*3B0005305A	SCREW,BPB M3X5
65	*3B0007400A	SCREW,BPAA M3X6
66	*3B0000808A	SCREW,BPP M3X8
68	*3B0001306A	SCREW,J,S M3X6
69	*3B0005308A	SCREW,BPB M3X8
70	*3B0005708A	SCREW,BPB M3X8(BLK)
71	*3B0004408A	SCREW,BPS M3X8(BLK)[US,C,GE]
72	*3B0001905A	SCREW,J,S M4X5(BLK)
73	*3B0001308A	SCREW,J,S M3X8
74	*3B0007008A	SCREW,FPP M3X8
75	*3B0007300A	SCREW,FPS TITE M3X6
76	*3B0000810A	SCREW,BPP M3X10
77	*3B0000106A	SCREW,BPS M3X6 [EXCEPT J]

4 PC BOARDS AND PARTS LIST

基板図とパーツリスト

CONVERTER PCB (3E9024700B)

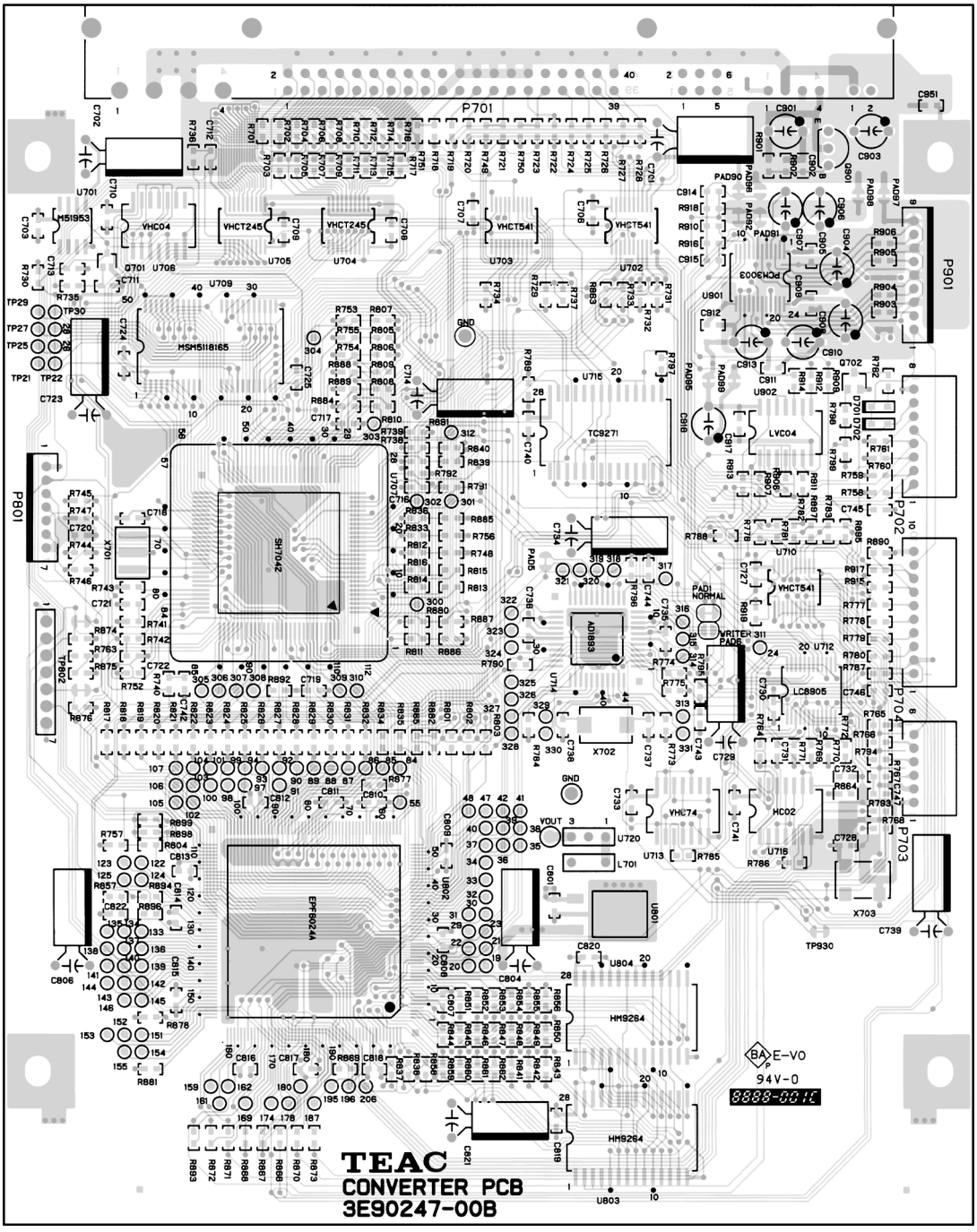

CONVERTER PCB (3E9024700D)

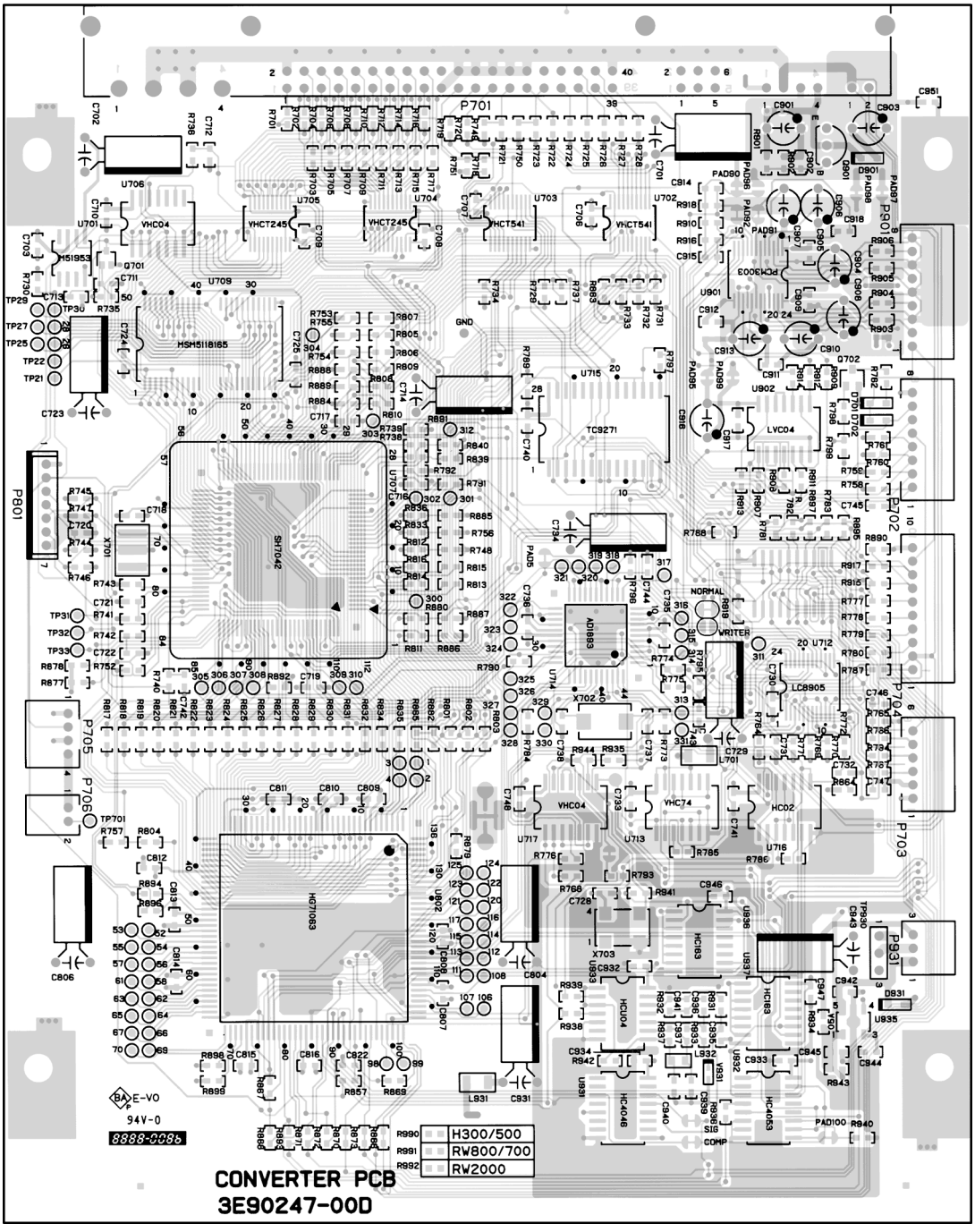

AUDIO/POWER PCB

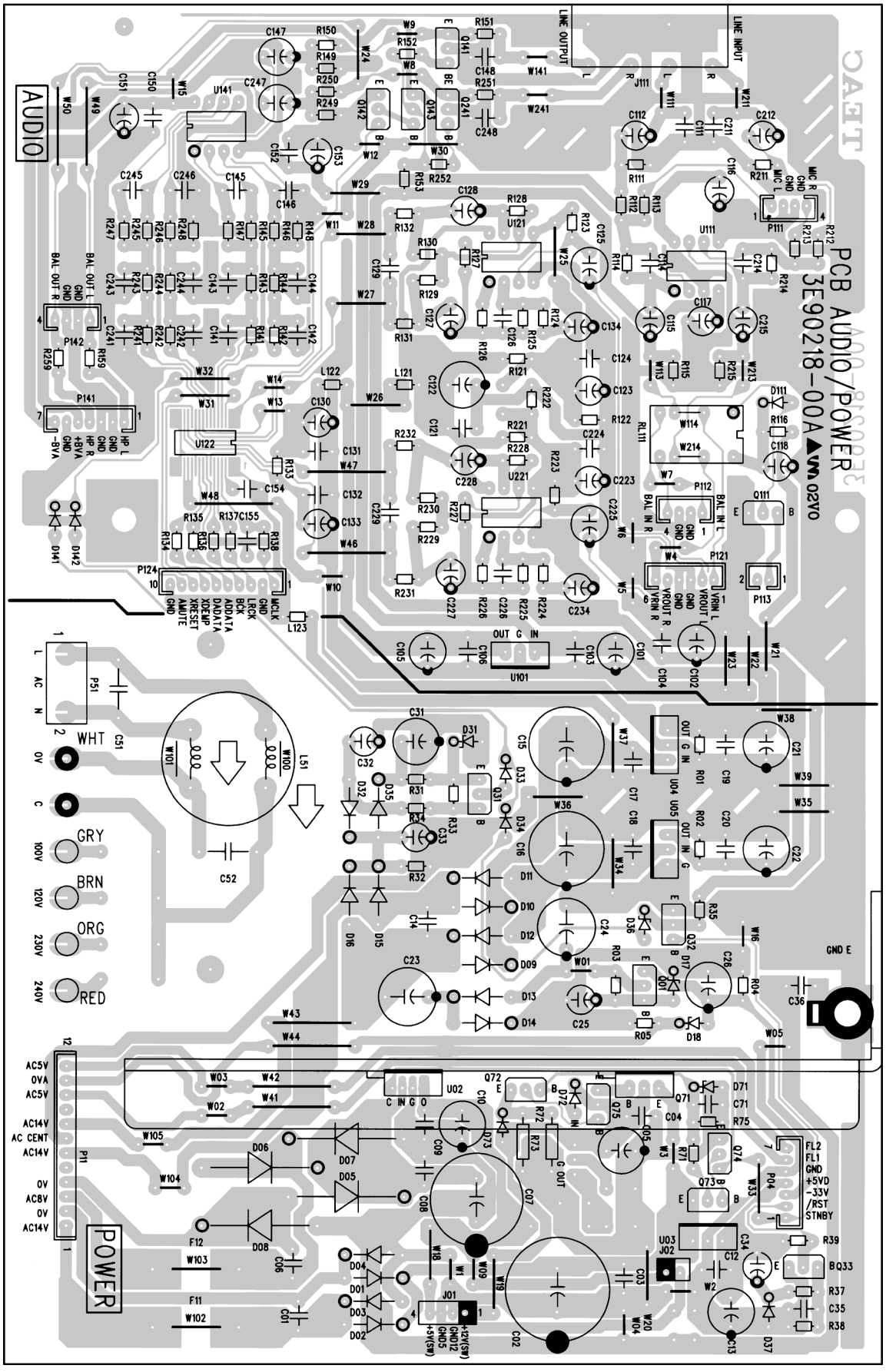

FRONT PCB

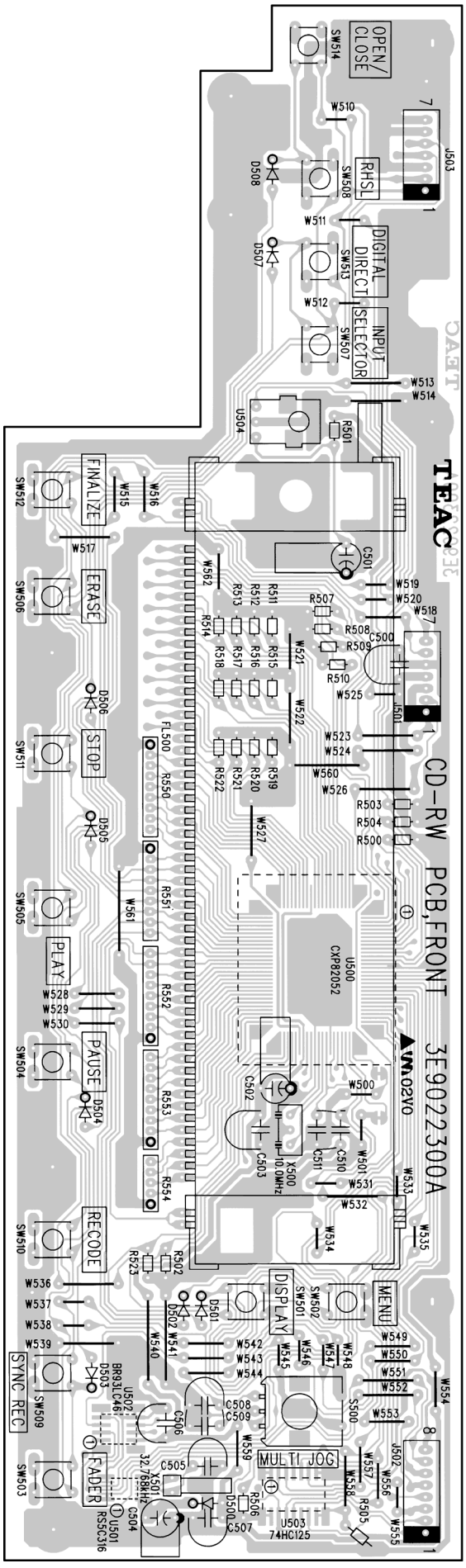

MIC/HP PCB

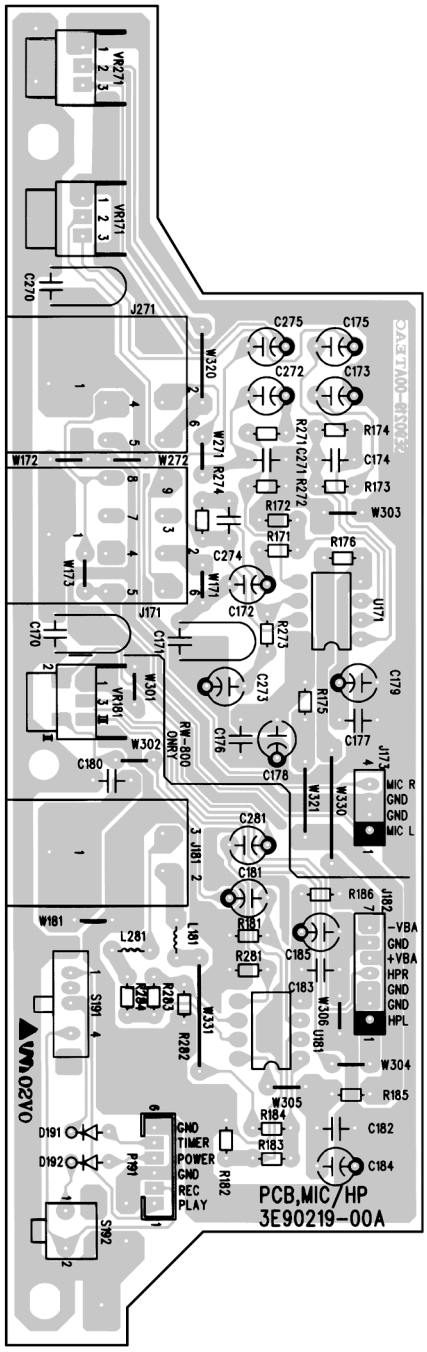

VR PCB

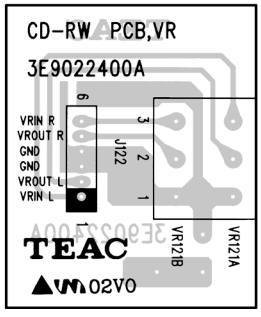

DIGITAL I/O PCB

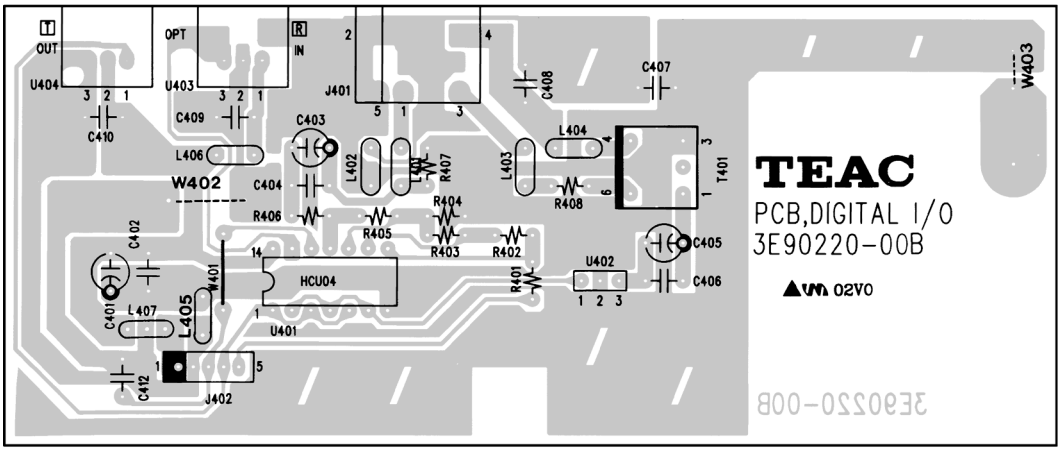

V SELECTOR PCB

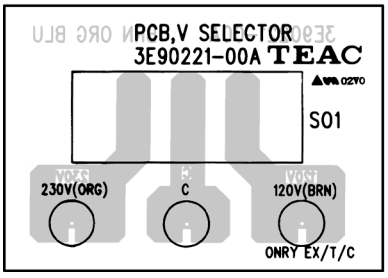

CONVERTER PCB ASSY

REF.NO.		PARTS NO.	DESCRIPTION
		3E9524710D	PCB ASSY,CONVERTER
D701,702		3S002984	DIODE,1SS355
L701		E0013294	COIL,LQH3N 4.7UH
P701		3E011730	CONNECT,NS-TECH
P702		3E001340	CONNECT PLUG 8P,S8B-PH-K
P703		3E009790	CONNECT PLUG 6P,89401-0610
P704		3E001360	CONNECT PLUG 10P,S10B-PH-K
Q701		3S002994	TR,DTC124EUA
Q702		3S003004	TR,2SA1037AK
U702,703		S0037164	IC,TC74VHCT541AFT(EL)
U704,705		S0037174	IC,TC74VHCT245AFT(EL)
U706		3S002924	IC,TC74VHC04F(EL)SMT
U707		S00368800A	IC,HD6437042 CONVERT
U709		S0036813	IC,MSM5118165D
U712		3S002954	IC,LC8905V
U713		3S002914	IC,TC74VHC74F(EL)SMT
U714		3S002963	IC,AD1893JST
U715		3S002944	IC,TC9271F(ELP)SMT
U716		3S002934	IC,TC74HC02AF(EL)SMT
U717		3S002924	IC,TC74VHC04F(EL)SMT
U802		S00361900A	IC,AUDIO CONVERTER
X701		3E011994	RES,CSTCC 7.17MG0H6-TC
X702		3E011984	X'TAL,LIM55A 16MHZ
X703		3E011974	X'TAL,11.289MHZ

AUDIO/POWER PCB ASSY

REF.NO.		PARTS NO.	DESCRIPTION
		*3E9521800A	PCB ASSY,AUDIO/POWER [J,US,C,GE]
		*3E9521840A	PCB ASSY,AUDIO/POWER [E,UK,A]
		*3M0097300B	HEAT SINK
		*3B0000808A	SCREW,BPP M3X8
		3E0043200A	TERMINAL,EARTH PLATE B
C01	⚠	3C011640	CC,YF 50V 0.1UF Z
C02	⚠	3C012790	CE, 35V 4700UF GS
C04	⚠	3C011640	CC,YF 50V 0.1UF Z
C06	⚠	3C011640	CC,YF 50V 0.1UF Z
C07	⚠	3C001350	CE, 16V 10000UF M
C09	⚠	3C011640	CC,YF 50V 0.1UF Z
C12	⚠	3C011640	CC,YF 50V 0.1UF Z
C14	⚠	3C011640	CC,YF 50V 0.1UF Z
C15,16	⚠	3C009820	CE, 25V 470PF GS
C24	⚠	3C000790	CE, 50V 220UF M
C31	⚠	3C009730	CE, 25V 220UF GS
C32	⚠	3C000270	CE, 50V 4.7UF M
C33	⚠	3C009640	CE, 50V 22UF GS
C51,52	⚠	3E004300	S.KILLER,CS12-F2GA472MYAS
D01-04	⚠	3S000031	DIODE,1N4003-TR
D05-08	⚠	3S001130	DIODE,1N5404
D09-12	⚠	3S000031	DIODE,1N4003-TR
D13-16	⚠	3S000031	DIODE,1N4003-TR

AUDIO/POWER PCB ASSY

REF.NO.		PARTS NO.	DESCRIPTION
D17		3S001750	ZDI,MTZJ33B
D18		3S000681	ZDI,MTZJ5.1B
D31		3S000681	ZDI,MTZJ5.1B
D32	⚠	3S000031	DIODE,1N4003-TR
D33,34		3S000241	DIODE,1SS133
D35	⚠	3S000031	DIODE,1N4003-TR
D36		3S000681	ZDI,MTZJ5.1B
D37		3S000241	DIODE,1SS133
D71		3S003201	ZDI,MTZJ12B
D72,73		3S000241	DIODE,1SS133
D141,142		3S000241	DIODE,1SS133
J111		3E009030	JACK,RJ-1073B-09-0520A
L51	⚠	3E004290	COIL,1MH/1.5A FKOB160MH16
L121		3E011800	COIL,1.0 UH K
L122		3E011810	COIL,47UH K
L123		3E011820	FB,FBR07HA850SB-00
P04		3E000710	CONNECT PLUG 7P,B7B-PH-K
P11		3E001240	CONNECT PLUG 12P,B12B-EH-A
P51	⚠	3E002170	TERMINAL LAPPING 2P[E,UK,A]
P111		3E000680	CONNECT PLUG 4P,B4B-PH-K
P121		3E000700	CONNECT PLUG 6P,B6B-PH-K
P124		3E000740	CONNECT PLUG 10P,B10B-PH-K
P141		3E000710	CONNECT PLUG 7P,B7B-PH-K
Q01	⚠	3S002300	TR,KSA733C-GTA
Q31	⚠	3S002300	TR,KSA733C-GTA
Q32		3S002450	TR,DTC114ESTP
Q33		3S002310	TR,KSC945C-GTA
Q71	⚠	3S000400	TR,2SB1015Y
Q72		3S002310	TR,KSC945C-GTA
Q73		3S000301	TR,DTA124ES
Q74		3S000291	TR,DTC124ES
Q75		3S002300	TR,KSA733C-GTA
Q141,241		3S000731	TR,2SD2144S
Q142		3S000291	TR,DTC124ES
Q143		3S000301	TR,DTA124ES
R72,73	⚠	3R007100	RD,1/2W 470 OHM J
U02	⚠	3S003040	IC,BA05ST
U03	⚠	3S000650	IC,NJM7805FA
U04	⚠	3S002170	IC,NJM7812FA
U05	⚠	3S003030	IC,NJM7912FA
U101	⚠	3S000650	IC,NJM7805FA
U111		3S001700	IC,NJM4580D
U121,221		3S003010	IC,NJM2100D
U122		S0035883	IC,CS4223-KS
U141		3S001700	IC,NJM4580D

FRONT PCB ASSY

REF.NO.	PARTS NO.	DESCRIPTION
	*3E9522300A	PCB ASSY,FRONT
	*3M0090000B	HOLDER FL
D500-508	3S000241	DIODE,1SS133
FL500	3E0117500A	DISPLAY,HNA-16MM23 RW(L)
SW501-514	3E002070	SW,TACT SKQSAB HMR-187
S500	3E007320	SW,ENCODER EC11B15244
U500	3S0030600B	IC,CXP82040-115Q
U501	3S002844	IC,RS5C316A-E2 SMT
U502	3S003254	IC,BR93LC46RF-WE2 SMT
U503	3S003074	IC,TC74HC125AF(EL)SMT
U504	3S002200	REMOCON.SENSER,TSOP1838RF
X500	3E011740	RESONATOR,CST 10.00MTW
X501	3E012050	X'TAL,32.768KHZ

MIC/HP PCB ASSY

REF.NO.	PARTS NO.	DESCRIPTION
	*3E9521910A	PCB ASSY,MIC/HP
D191,192	3S000241	DIODE,1SS133
J171,271	3E005500	JACK,JY-6315-01-050GD
J181	3E002140	JACK,JY-6313-01-030GD
L181,281	3E011800	COIL,1.0 UH K
P191	3E000700	CONNECT PLUG 6P,B6B-PH-K
S191	3E011780	SW,SLIDE SSSS91A600
S192	3E011790	SW,TACT SKHVLH 0.98N
U171	3S001700	IC,NJM4580D
U181	3S000850	IC,NJM4560D
VR171,271	3R005570	VAR RES,RK09K111-10KA
VR181	3R005560	VAR RES,RK09K12A-20KA

VR PCB ASSY

REF.NO.	PARTS NO.	DESCRIPTION
	*3E9522400A	PCB ASSY,VR
VR121	3R005550	VAR RES,RK1612220-20KA

DIGITAL I/O PCB ASSY

REF.NO.	PARTS NO.	DESCRIPTION
	*3E9522000B	PCB ASSY,DIGI I/O
J401	3E011850	JACK,RJ-1060A-31-0541A
L401-405	3E011820	FB,FBR07HA850SB-00
L406	3E011810	COIL,47UH K
L407	3E013130	FILTER,EMT103BT
T401	3E0132300A	PULS TRANS,S-701-001
U401	3S001660	IC,TC74HCU04AP
U402	3E011830	FILTER,EMT47BT
U403	3S001680	IC,GP1F32R
U404	3S002290	IC,GP1F32T

V SELECTOR PCB ASSY

REF.NO.	PARTS NO.	DESCRIPTION
	*3E9522100A	PCB ASSY,V SELECTOR[US,C,GE]
S01	⚠ 3E002110	SW,SLIDE SL13B-022

5 INCLUDED ACCESSORIES
付属品

INCLUDED ACCESSORIES

REF.NO.	PARTS NO.	DESCRIPTION	REMARKS
	3D0032300A	OWNER'S MNL,E/F/G/I/S [E]	
	3D0032400A	OWNER'S MNL,JPN [J]	
	3D0034100A	OWNER'S MNL,E/F [US,C,GE,UK,A]	
	*3D0034600A	MNL START GUIDE,E/F [US,C,GE,UK,A]	
	*3D0034800A	MNL START GUIDE,GIS [E]	
	3E0123500A	REMOTE CONTROL UNIT,RC-753 [EXCEPT J]	
	3E0123600A	REMOTE CONTROL UNIT,RC-754 [J]	
	3E003660	BATTERY,UM-3(2P X ED)	
	3E000380	PIN CORD	
	3E013190	CABLE OPTICAL 1.0M	

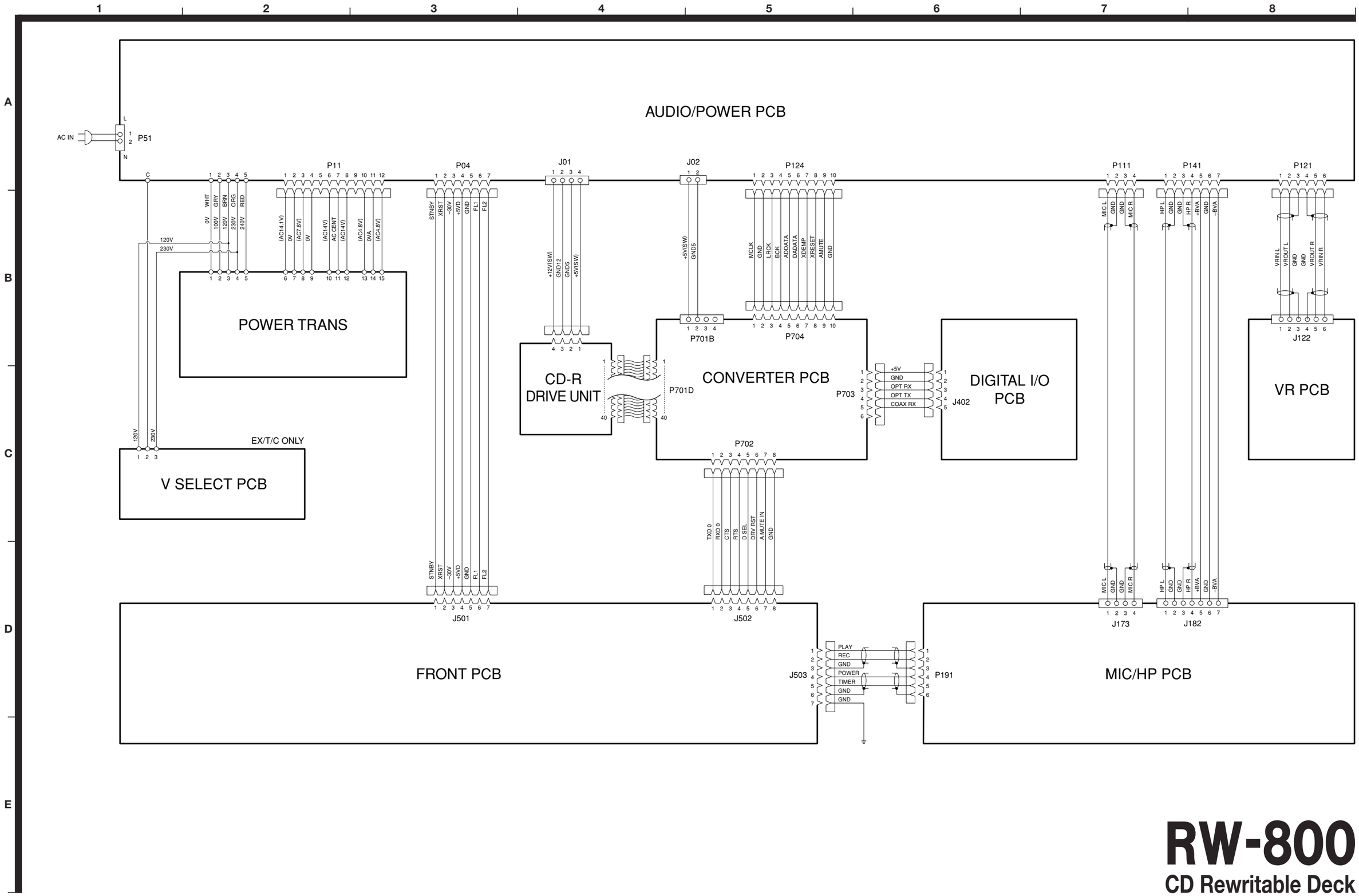

RW-800

CD Rewritable Deck

1 st Issue; June 2000

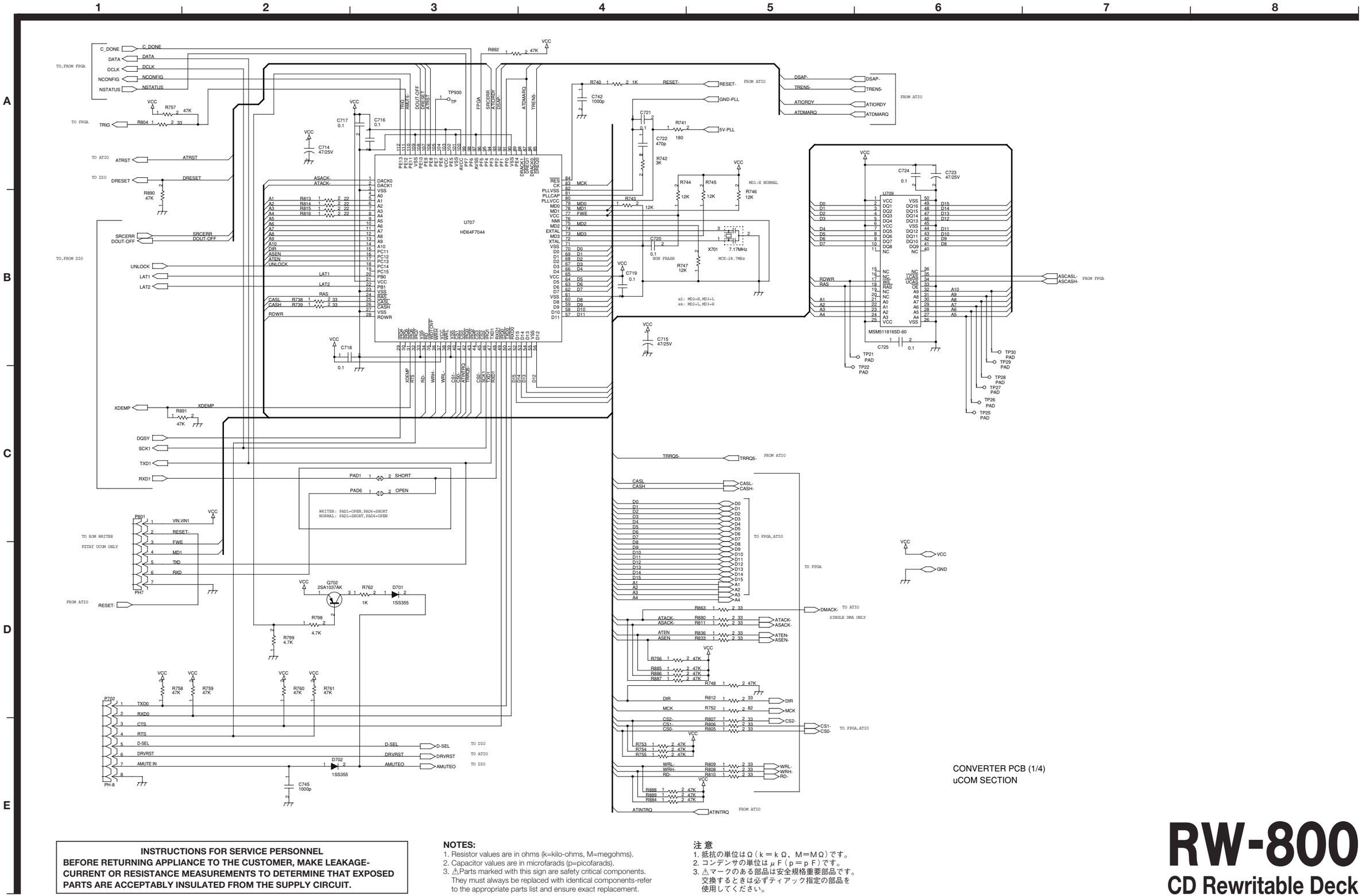

INSTRUCTIONS FOR SERVICE PERSONNEL
BEFORE RETURNING APPLIANCE TO THE CUSTOMER, MAKE LEAKAGE-CURRENT OR RESISTANCE MEASUREMENTS TO DETERMINE THAT EXPOSED PARTS ARE ACCEPTABLY INSULATED FROM THE SUPPLY CIRCUIT.

NOTES:
1. Resistor values are in ohms (k=kilo-ohms, M=megohms).
2. Capacitor values are in microfarads (p=picofarads).
3. ⚠Parts marked with this sign are safety critical components. They must always be replaced with identical components-refer to the appropriate parts list and ensure exact replacement.

注 意
1. 抵抗の単位はΩ（ｋ＝ｋΩ，Ｍ＝ＭΩ）です。
2. コンデンサの単位はμＦ（ｐ＝ｐＦ）です。
3. ⚠マークのある部品は安全規格重要部品です。交換するときは必ずティアック指定の部品を使用してください。

RW-800
CD Rewritable Deck
1 st Issue; June 2000

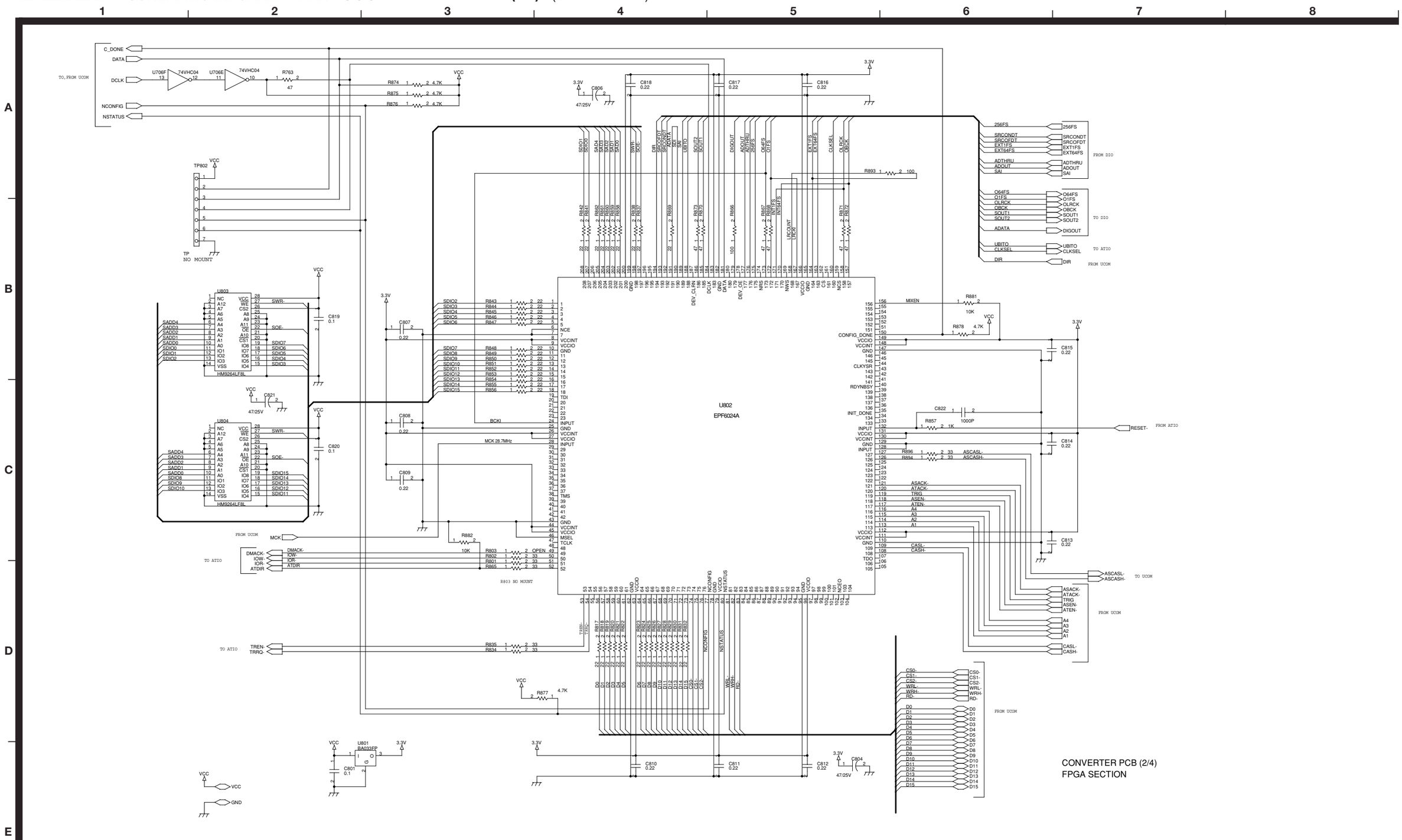

INSTRUCTIONS FOR SERVICE PERSONNEL
BEFORE RETURNING APPLIANCE TO THE CUSTOMER, MAKE LEAKAGE-CURRENT OR RESISTANCE MEASUREMENTS TO DETERMINE THAT EXPOSED PARTS ARE ACCEPTABLY INSULATED FROM THE SUPPLY CIRCUIT.

NOTES:
1. Resistor values are in ohms (k=kilo-ohms, M=megohms).
2. Capacitor values are in microfarads (p=picofarads).
3. ⚠Parts marked with this sign are safety critical components. They must always be replaced with identical components-refer to the appropriate parts list and ensure exact replacement.

注 意
1. 抵抗の単位はΩ（ｋ＝ｋΩ，Ｍ＝ＭΩ）です。
2. コンデンサの単位はμＦ（ｐ＝ｐＦ）です。
3. ⚠マークのある部品は安全規格重要部品です。交換するときは必ずティアック指定の部品を使用してください。

RW-800
CD Rewritable Deck
1 st Issue; June 2000

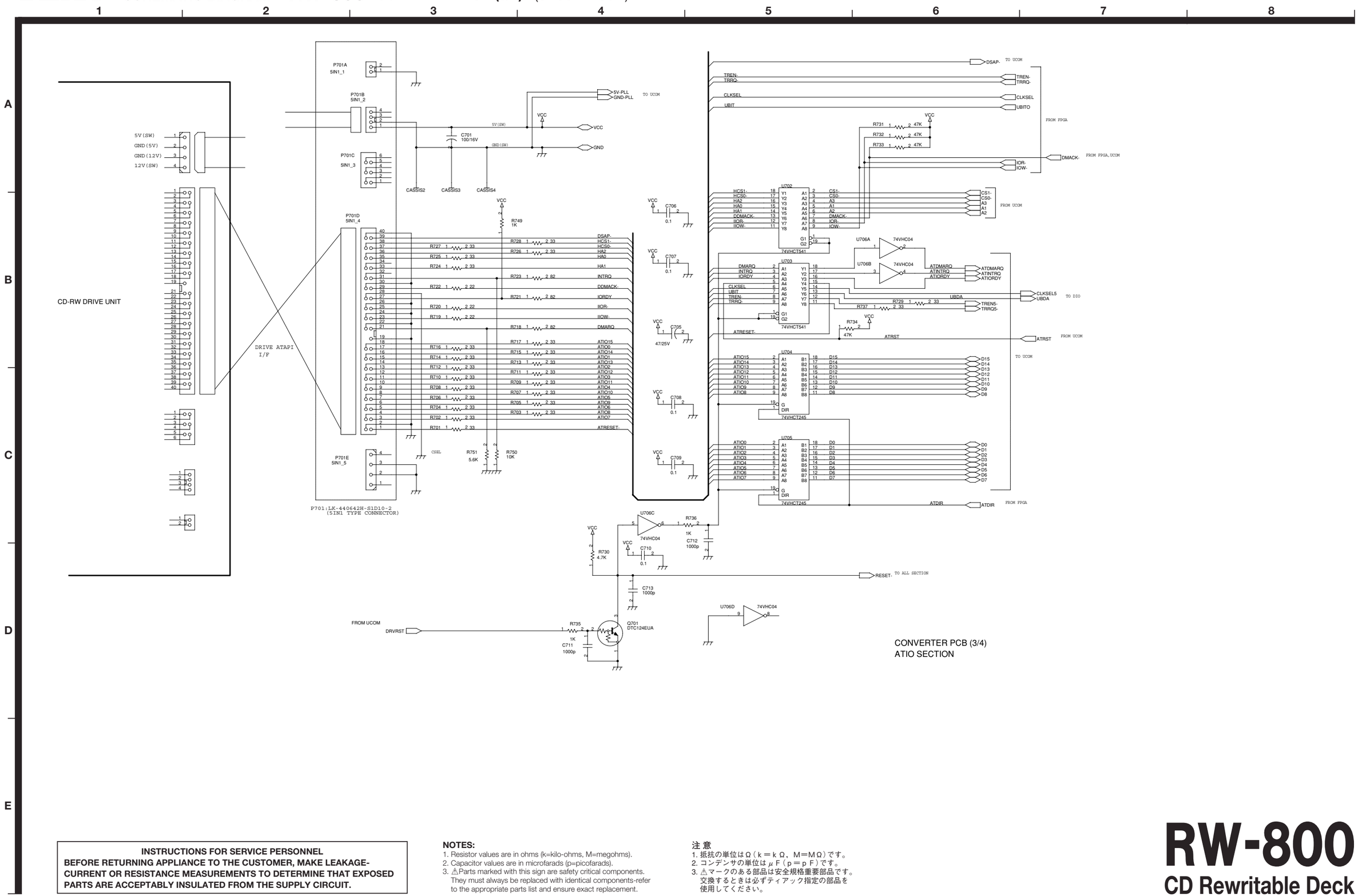

INSTRUCTIONS FOR SERVICE PERSONNEL
BEFORE RETURNING APPLIANCE TO THE CUSTOMER, MAKE LEAKAGE-CURRENT OR RESISTANCE MEASUREMENTS TO DETERMINE THAT EXPOSED PARTS ARE ACCEPTABLY INSULATED FROM THE SUPPLY CIRCUIT.

NOTES:
1. Resistor values are in ohms (k=kilo-ohms, M=megohms).
2. Capacitor values are in microfarads (p=picofarads).
3. ⚠Parts marked with this sign are safety critical components. They must always be replaced with identical components-refer to the appropriate parts list and ensure exact replacement.

注 意
1. 抵抗の単位はΩ（ｋ＝ｋΩ，Ｍ＝ＭΩ）です。
2. コンデンサの単位はμＦ（ｐ＝ｐＦ）です。
3. ⚠マークのある部品は安全規格重要部品です。交換するときは必ずティアック指定の部品を使用してください。

RW-800
CD Rewritable Deck
1 st Issue; June 2000

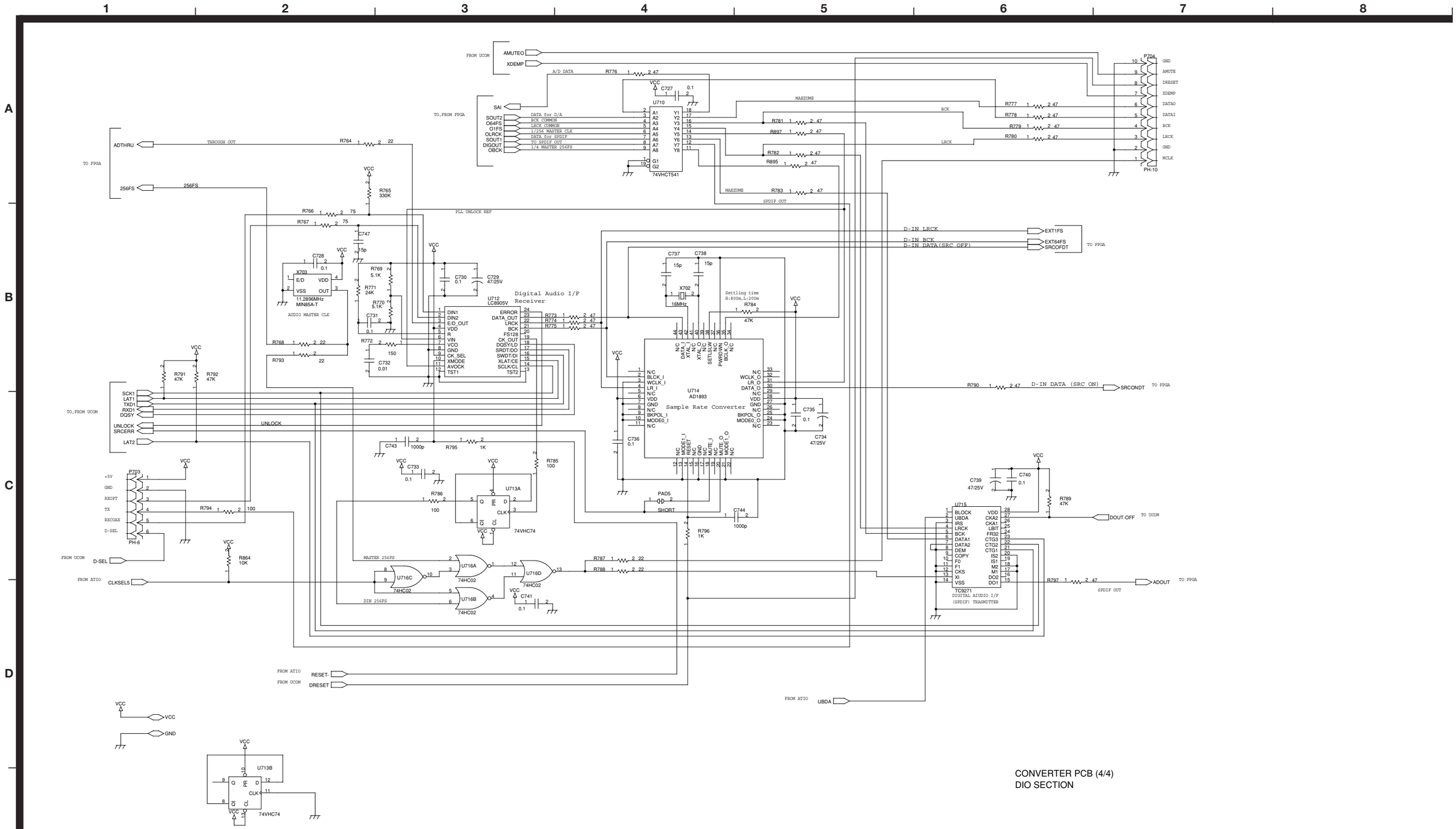

CONVERTER PCB (4/4)
DIO SECTION

INSTRUCTIONS FOR SERVICE PERSONNEL
BEFORE RETURNING APPLIANCE TO THE CUSTOMER, MAKE LEAKAGE-CURRENT OR RESISTANCE MEASUREMENTS TO DETERMINE THAT EXPOSED PARTS ARE ACCEPTABLY INSULATED FROM THE SUPPLY CIRCUIT.

NOTES:
1. Resistor values are in ohms (k=kilo-ohms, M=megohms).
2. Capacitor values are in microfarads (p=picofarads).
3. ⚠Parts marked with this sign are safety critical components. They must always be replaced with identical components-refer to the appropriate parts list and ensure exact replacement.

注 意
1. 抵抗の単位はΩ（ｋ＝ｋΩ、Ｍ＝ＭΩ）です。
2. コンデンサの単位はμＦ（ｐ＝ｐＦ）です。
3. ⚠マークのある部品は安全規格重要部品です。交換するときは必ずティアック指定の部品を使用してください。

RW-800
CD Rewritable Deck
1 st Issue; June 2000

TEAC SCHEMATIC DIAGRAM RW-800 CONVERTER PCB (1/4) (3E9024700D)

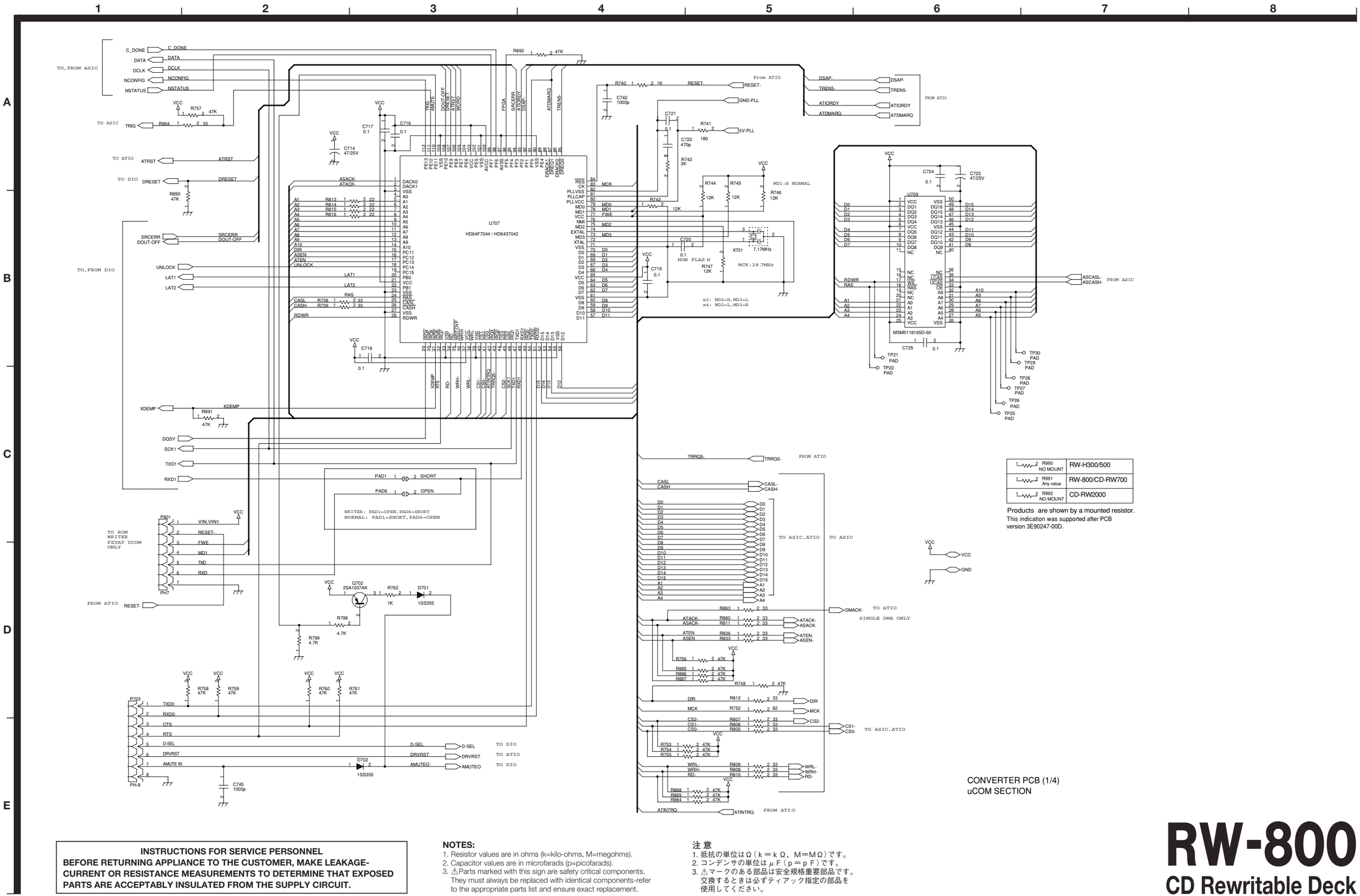

R990 NO MOUNT	RW-H300/500
R991 Any value	RW-800/CD-RW700
R992 NO MOUNT	CD-RW2000

Products are shown by a mounted resistor.
This indication was supported after PCB version 3E90247-00D.

CONVERTER PCB (1/4)
uCOM SECTION

INSTRUCTIONS FOR SERVICE PERSONNEL
BEFORE RETURNING APPLIANCE TO THE CUSTOMER, MAKE LEAKAGE-CURRENT OR RESISTANCE MEASUREMENTS TO DETERMINE THAT EXPOSED PARTS ARE ACCEPTABLY INSULATED FROM THE SUPPLY CIRCUIT.

NOTES:
1. Resistor values are in ohms (k=kilo-ohms, M=megohms).
2. Capacitor values are in microfarads (p=picofarads).
3. ⚠Parts marked with this sign are safety critical components. They must always be replaced with identical components-refer to the appropriate parts list and ensure exact replacement.

注 意
1. 抵抗の単位はΩ（k＝kΩ，M＝MΩ）です。
2. コンデンサの単位はμF（p＝pF）です。
3. ⚠マークのある部品は安全規格重要部品です。交換するときは必ずティアック指定の部品を使用してください。

RW-800
CD Rewritable Deck
1 st Issue; June 2000

TEAC SCHEMATIC DIAGRAM RW-800 CONVERTER PCB (2/4) (3E9024700D)

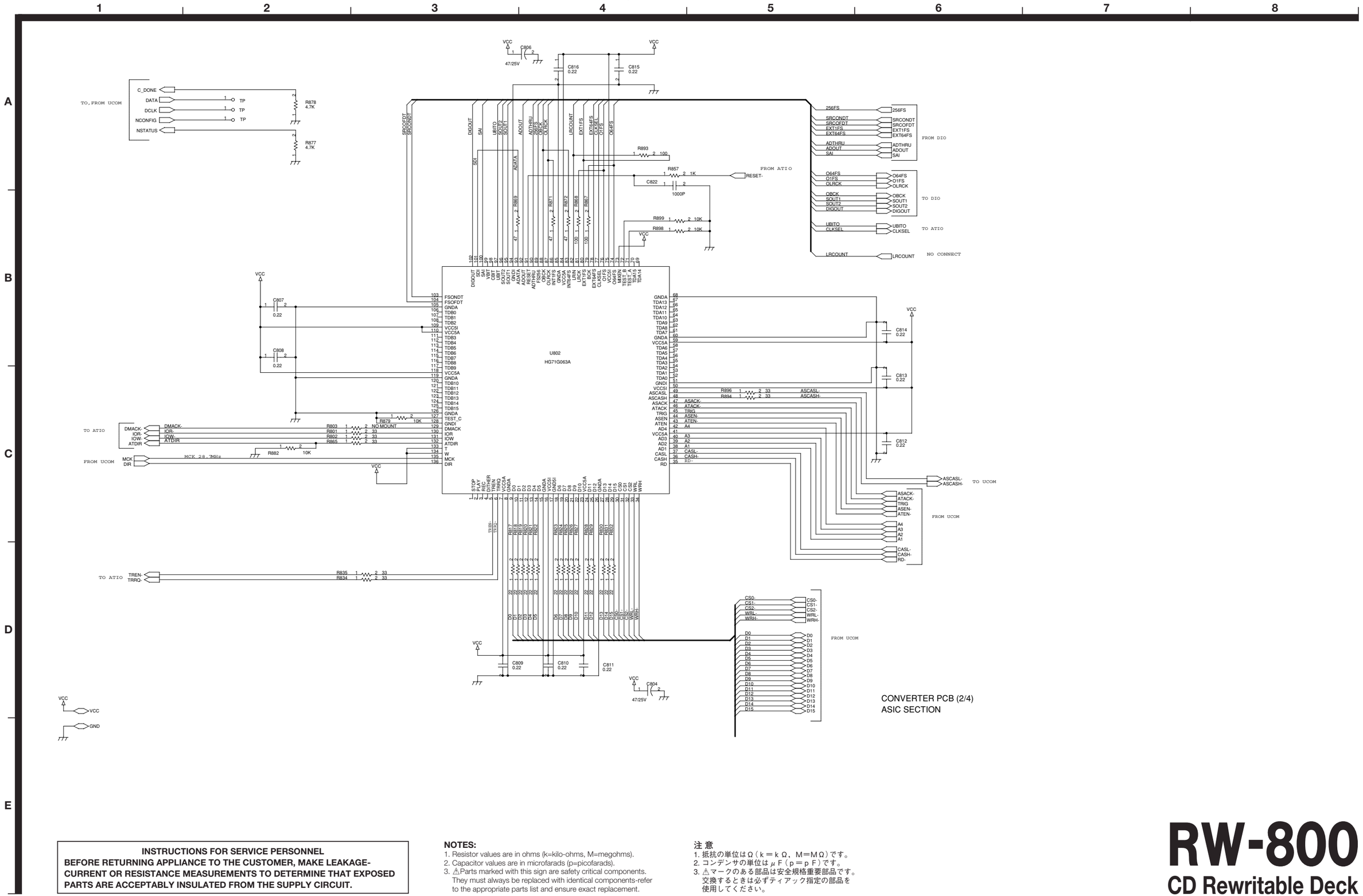

INSTRUCTIONS FOR SERVICE PERSONNEL
BEFORE RETURNING APPLIANCE TO THE CUSTOMER, MAKE LEAKAGE-CURRENT OR RESISTANCE MEASUREMENTS TO DETERMINE THAT EXPOSED PARTS ARE ACCEPTABLY INSULATED FROM THE SUPPLY CIRCUIT.

NOTES:
1. Resistor values are in ohms (k=kilo-ohms, M=megohms).
2. Capacitor values are in microfarads (p=picofarads).
3. ⚠Parts marked with this sign are safety critical components. They must always be replaced with identical components-refer to the appropriate parts list and ensure exact replacement.

注 意
1. 抵抗の単位はΩ（ｋ＝ｋΩ，Ｍ＝ＭΩ）です。
2. コンデンサの単位はμＦ（ｐ＝ｐＦ）です。
3. ⚠マークのある部品は安全規格重要部品です。交換するときは必ずティアック指定の部品を使用してください。

RW-800
CD Rewritable Deck
1 st Issue; June 2000

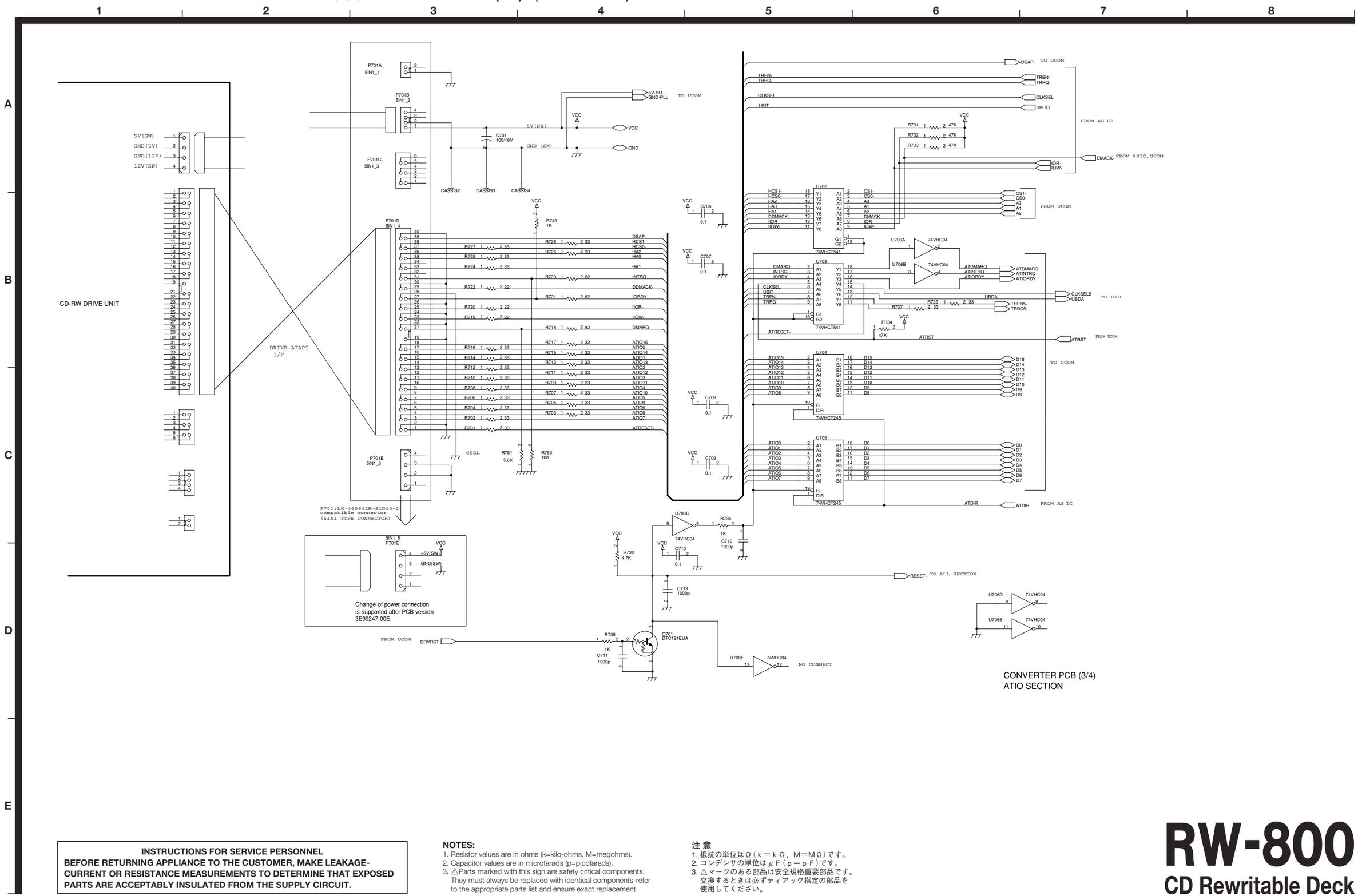

CONVERTER PCB (3/4)
ATIO SECTION

INSTRUCTIONS FOR SERVICE PERSONNEL
BEFORE RETURNING APPLIANCE TO THE CUSTOMER, MAKE LEAKAGE-CURRENT OR RESISTANCE MEASUREMENTS TO DETERMINE THAT EXPOSED PARTS ARE ACCEPTABLY INSULATED FROM THE SUPPLY CIRCUIT.

NOTES:
1. Resistor values are in ohms (k=kilo-ohms, M=megohms).
2. Capacitor values are in microfarads (p=picofarads).
3. ⚠Parts marked with this sign are safety critical components. They must always be replaced with identical components-refer to the appropriate parts list and ensure exact replacement.

注 意
1. 抵抗の単位はΩ（ｋ＝ｋΩ，Ｍ＝ＭΩ）です。
2. コンデンサの単位はμＦ（ｐ＝ｐＦ）です。
3. ⚠マークのある部品は安全規格重要部品です。交換するときは必ずティアック指定の部品を使用してください。

RW-800
CD Rewritable Deck
1 st Issue; June 2000

TEAC SCHEMATIC DIAGRAM RW-800 CONVERTER PCB (4/4) (3E9024700D)

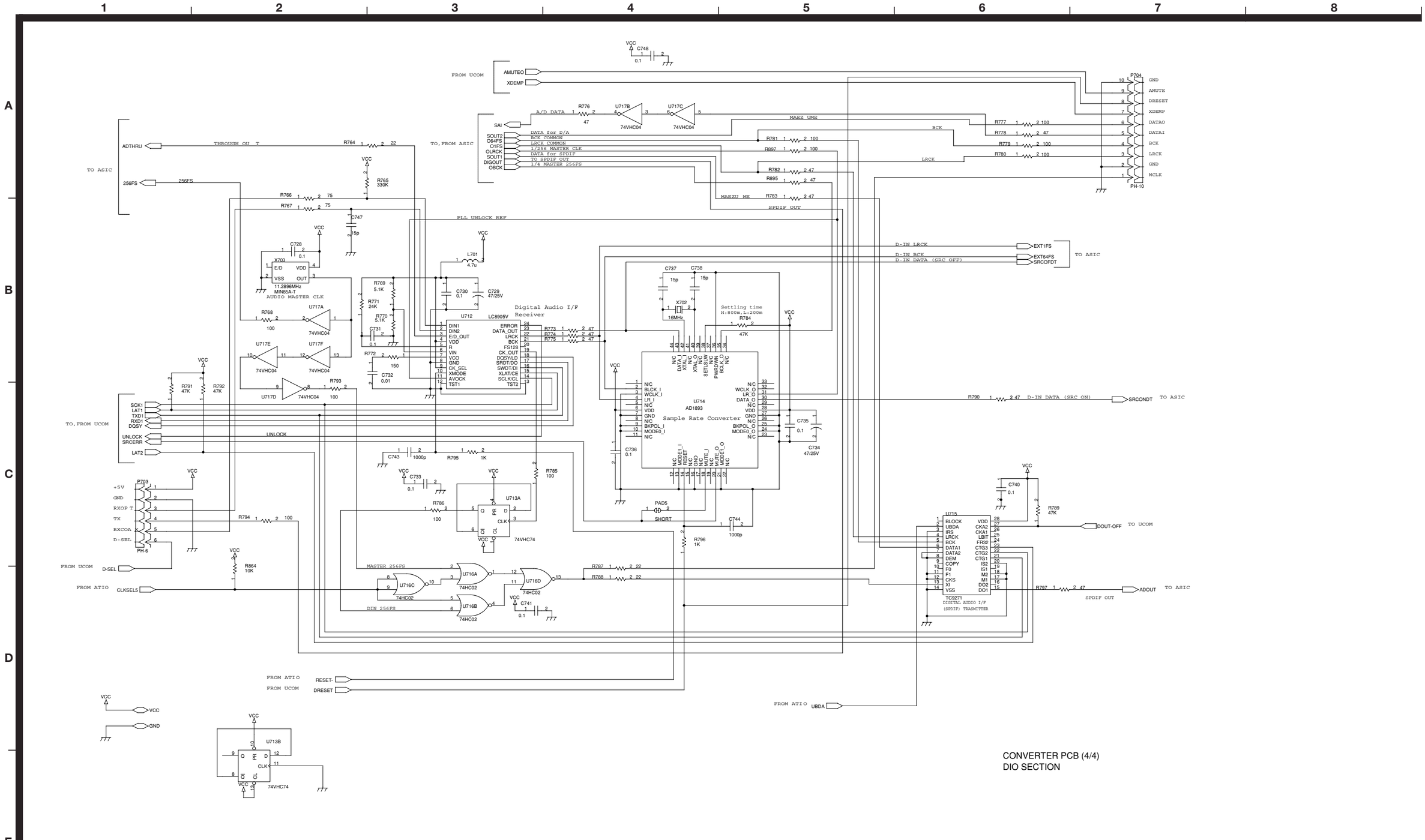

CONVERTER PCB (4/4)
DIO SECTION

INSTRUCTIONS FOR SERVICE PERSONNEL
BEFORE RETURNING APPLIANCE TO THE CUSTOMER, MAKE LEAKAGE-CURRENT OR RESISTANCE MEASUREMENTS TO DETERMINE THAT EXPOSED PARTS ARE ACCEPTABLY INSULATED FROM THE SUPPLY CIRCUIT.

NOTES:
1. Resistor values are in ohms (k=kilo-ohms, M=megohms).
2. Capacitor values are in microfarads (p=picofarads).
3. ⚠Parts marked with this sign are safety critical components. They must always be replaced with identical components-refer to the appropriate parts list and ensure exact replacement.

注 意
1. 抵抗の単位はΩ（ｋ＝ｋΩ，Ｍ＝ＭΩ）です。
2. コンデンサの単位はμＦ（ｐ＝ｐＦ）です。
3. ⚠マークのある部品は安全規格重要部品です。交換するときは必ずティアック指定の部品を使用してください。

RW-800
CD Rewritable Deck
1 st Issue; June 2000

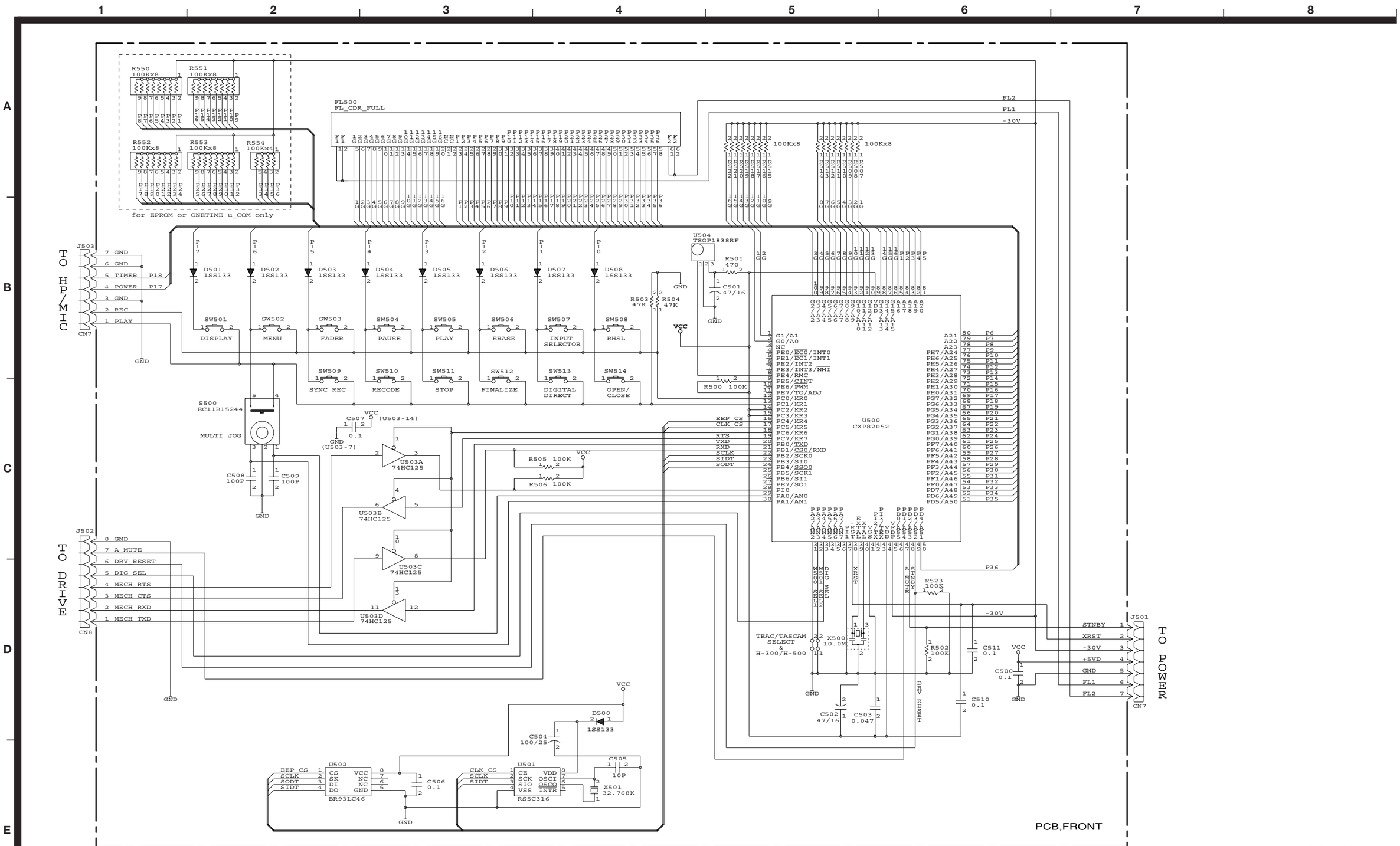

INSTRUCTIONS FOR SERVICE PERSONNEL
BEFORE RETURNING APPLIANCE TO THE CUSTOMER, MAKE LEAKAGE-CURRENT OR RESISTANCE MEASUREMENTS TO DETERMINE THAT EXPOSED PARTS ARE ACCEPTABLY INSULATED FROM THE SUPPLY CIRCUIT.

NOTES:
1. Resistor values are in ohms (k=kilo-ohms, M=megohms).
2. Capacitor values are in microfarads (p=picofarads).
3. ⚠Parts marked with this sign are safety critical components. They must always be replaced with identical components-refer to the appropriate parts list and ensure exact replacement.

注 意
1. 抵抗の単位はΩ（k＝kΩ、M＝MΩ）です。
2. コンデンサの単位はμF（p＝pF）です。
3. ⚠マークのある部品は安全規格重要部品です。交換するときは必ずティアック指定の部品を使用してください。

RW-800
CD Rewritable Deck

1 st Issue; June 2000

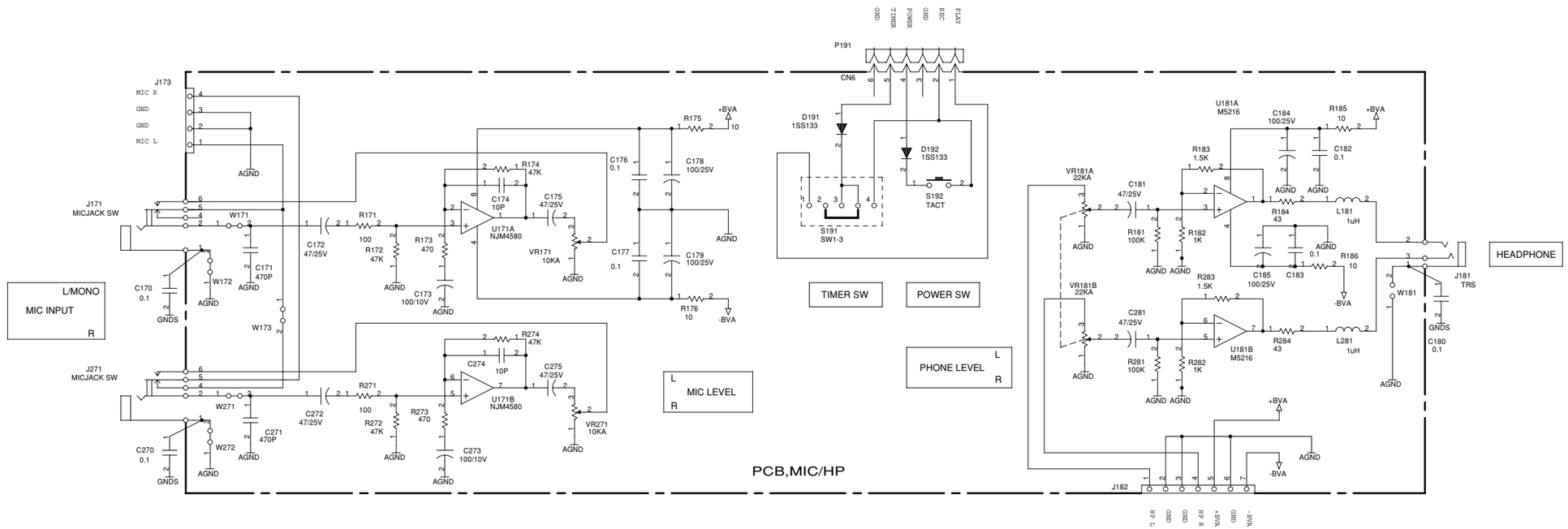

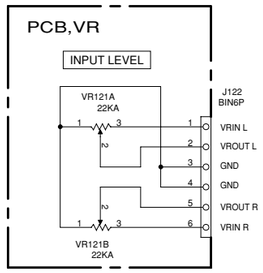

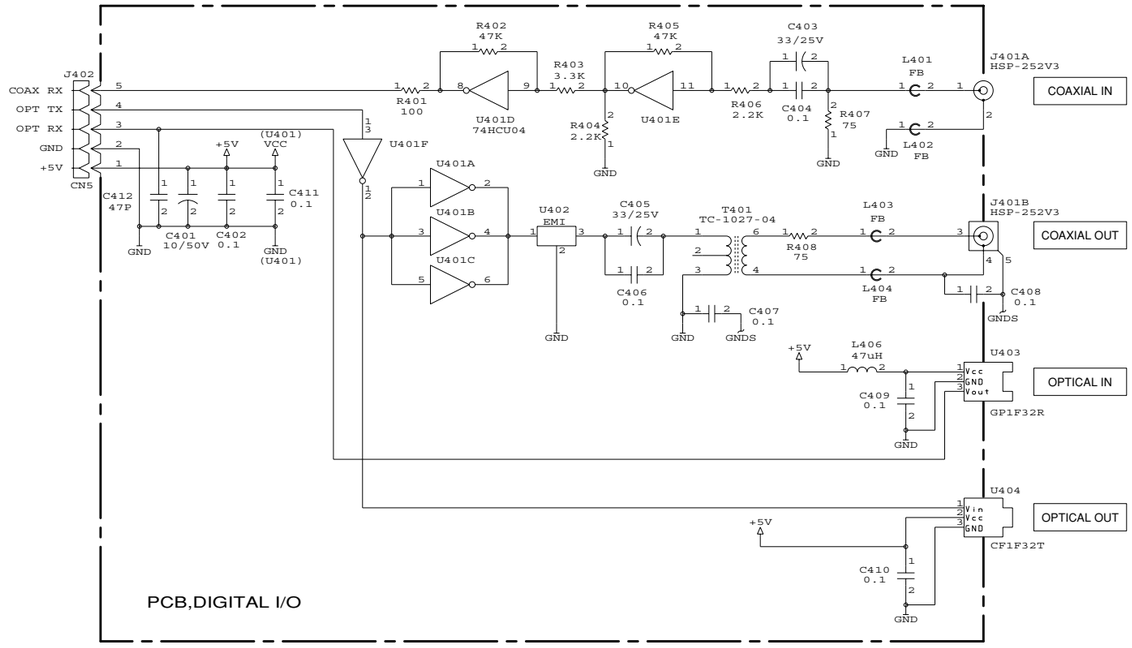

INSTRUCTIONS FOR SERVICE PERSONNEL
BEFORE RETURNING APPLIANCE TO THE CUSTOMER, MAKE LEAKAGE-CURRENT OR RESISTANCE MEASUREMENTS TO DETERMINE THAT EXPOSED PARTS ARE ACCEPTABLY INSULATED FROM THE SUPPLY CIRCUIT.

NOTES:
1. Resistor values are in ohms (k=kilo-ohms, M=megohms).
2. Capacitor values are in microfarads (p=picofarads).
3. ⚠Parts marked with this sign are safety critical components. They must always be replaced with identical components-refer to the appropriate parts list and ensure exact replacement.

注 意
1. 抵抗の単位はΩ（ｋ＝ｋΩ，Ｍ＝ＭΩ）です。
2. コンデンサの単位はμＦ（ｐ＝ｐＦ）です。
3. ⚠マークのある部品は安全規格重要部品です。交換するときは必ずティアック指定の部品を使用してください。

RW-800
CD Rewritable Deck
1 st Issue; June 2000

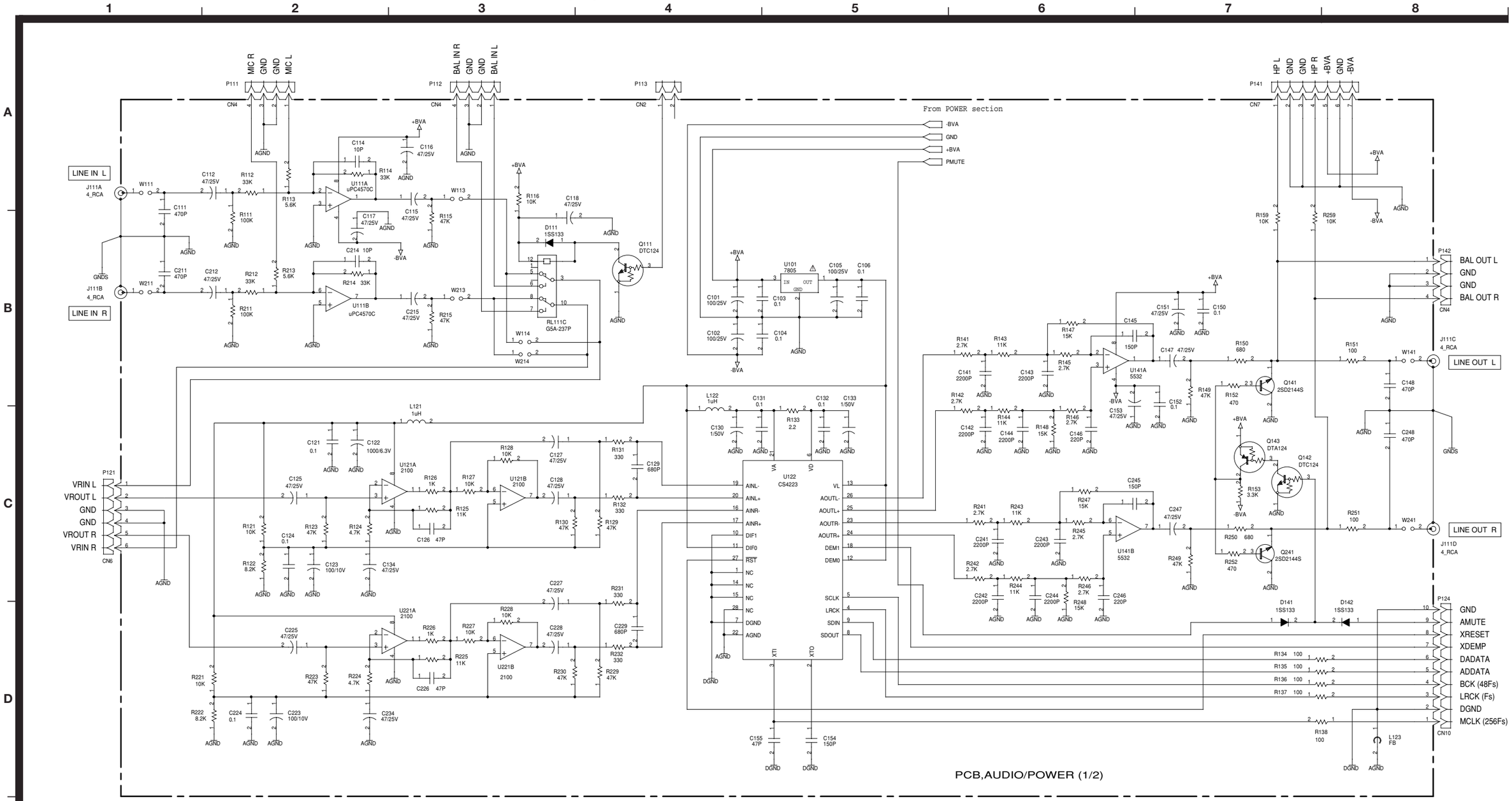

INSTRUCTIONS FOR SERVICE PERSONNEL
BEFORE RETURNING APPLIANCE TO THE CUSTOMER, MAKE LEAKAGE-CURRENT OR RESISTANCE MEASUREMENTS TO DETERMINE THAT EXPOSED PARTS ARE ACCEPTABLY INSULATED FROM THE SUPPLY CIRCUIT.

NOTES:
1. Resistor values are in ohms (k=kilo-ohms, M=megohms).
2. Capacitor values are in microfarads (p=picofarads).
3. ⚠Parts marked with this sign are safety critical components. They must always be replaced with identical components-refer to the appropriate parts list and ensure exact replacement.

注 意
1. 抵抗の単位はΩ（ｋ＝ｋΩ，Ｍ＝ＭΩ）です。
2. コンデンサの単位はμＦ（ｐ＝ｐＦ）です。
3. ⚠マークのある部品は安全規格重要部品です。交換するときは必ずティアック指定の部品を使用してください。

RW-800
CD Rewritable Deck
1 st Issue; June 2000

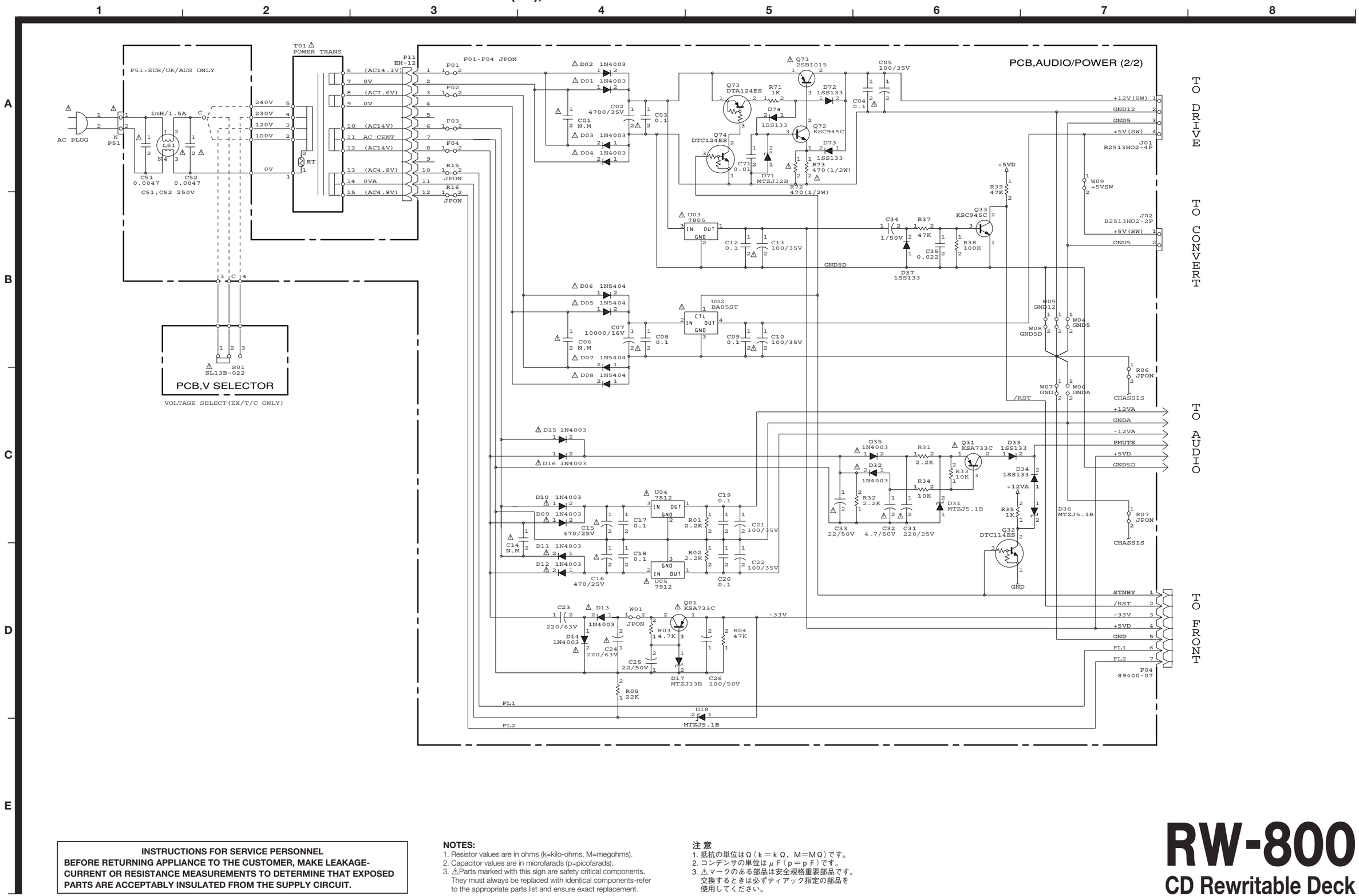

INSTRUCTIONS FOR SERVICE PERSONNEL
BEFORE RETURNING APPLIANCE TO THE CUSTOMER, MAKE LEAKAGE-CURRENT OR RESISTANCE MEASUREMENTS TO DETERMINE THAT EXPOSED PARTS ARE ACCEPTABLY INSULATED FROM THE SUPPLY CIRCUIT.

NOTES:
1. Resistor values are in ohms (k=kilo-ohms, M=megohms).
2. Capacitor values are in microfarads (p=picofarads).
3. ⚠Parts marked with this sign are safety critical components. They must always be replaced with identical components-refer to the appropriate parts list and ensure exact replacement.

注 意
1. 抵抗の単位はΩ（ｋ＝ｋΩ，Ｍ＝ＭΩ）です。
2. コンデンサの単位はμＦ（ｐ＝ｐＦ）です。
3. ⚠マークのある部品は安全規格重要部品です。交換するときは必ずティアック指定の部品を使用してください。

RW-800
CD Rewritable Deck
1 st Issue; June 2000